Historic American Timber Joinery

a graphic guide

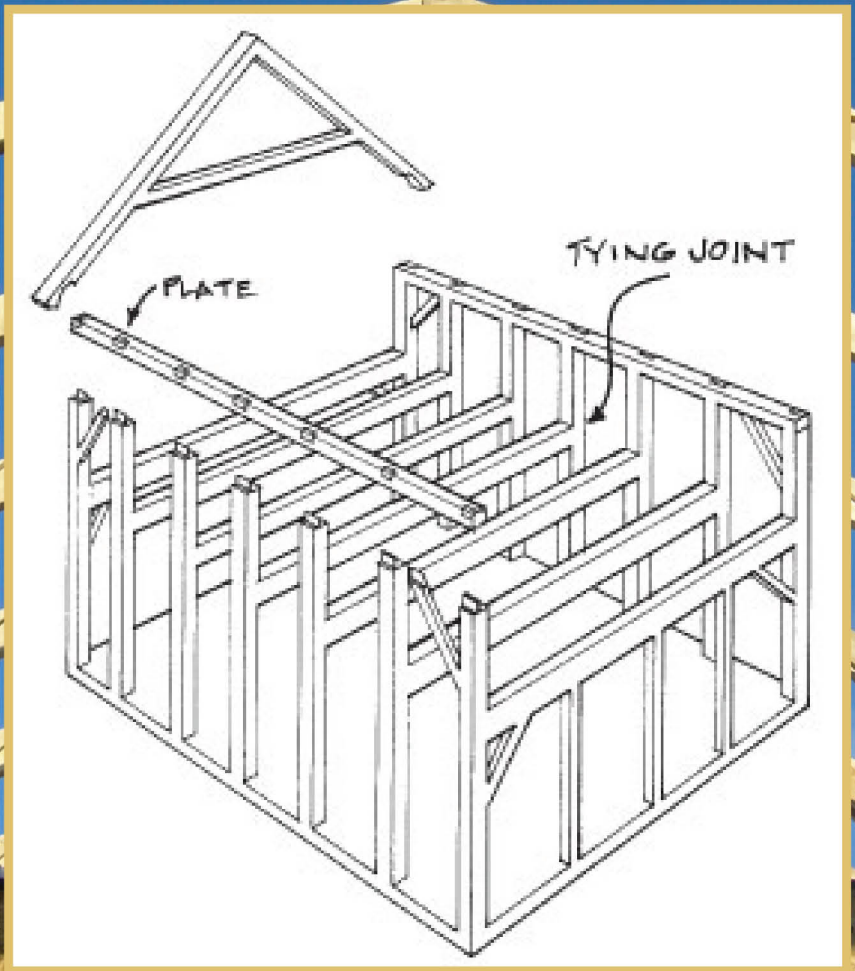

2004-08

background photo by Arbre Evolution on Flickr

National Center for Preservation Technology and Training

Technology Serving the Future of America's Heritage

www.ncptt.nps.gov/products

© 2004 NCPTT

HISTORIC AMERICAN TIMBER JOINERY

A Graphic Guide

By Jack A. Sobon

With illustrations by the author

Second Printing 2004

Published by the Timber Framers Guild, PO Box 60, Becket, MA 01223
Edited by Kenneth Rower, Director of Publications
©2002

FOREWORD

THE six chapters that follow discuss and illustrate the joints in American traditional timber-framed buildings of the past, showing common examples with variations as well as a few interesting regional deviations. The discussion does not describe the cutting of the joints (that is best left to the "how to" books), but may mention whether a joint is simple to fashion or labor intensive. Structural merits are discussed only in general terms. Most of the research underlying the articles was done in the heavily timber-framed Northeast, but the findings are applicable over a much wider area. The material was developed under a grant from the National Park Service and the National Center for Preservation Technology and Training. Its contents are solely the responsibility of the author and do not represent the official position of the NPS or the NCPTT. The material appeared originally as articles in Numbers 55-60 of TIMBER FRAMING (ISBN 1061-9860), the quarterly journal of the Timber Framers Guild.

Though the six chapters illustrate common as well as unusual timber joinery found in old structures, the catalog necessarily remains incomplete. Some of the illustrations used in this series had appeared previously in TIMBER FRAMING, and Fig. 1 of Chapter 1 appeared in my *Build a Classic Timber-Framed House* (see bibliography at the end of this volume).

I wish to thank the following organizations and individuals who have generously supplied assistance, information or access to buildings: Hancock Shaker Village, the National Center for Preservation Technology, the National Park Service, the Timber Framers Guild, Chris Albright, Richard Babcock, Will Beemer, Leslie Bird, Rolf Briggs, Rudy Christian, Abbott Lowell Cummings, Peter Haarmann, Greg Huber, Don Johnson, David Lanoue, Jan Lewandoski, John MacFarland, Paul Oatman, Ed Ondrick, Ken Rower, Peter Sinclair, Lawrence Sorli, Arron Sturgis, Marc and Wendi Volk, Dick Warner, Rob Williams and Preston Woodburn.

—Jack A. Sobon, Windsor, Massachusetts, December 2002

ISBN 0-9706643-2-X

TABLE OF CONTENTS

I. Tying Joints: Tie below Plate 2
II. Tying Joints: Tie at Plate 8
III. Sill and Floor Joints 20
IV. Wall and Brace Joints 28
V. Roof Joinery Excluding Trusses 34
VI. Scarf Joints 46

Photos and drawings by the author unless otherwise indicated. Bibliography, page 54.

INDEX TO JOINTS AND USEFUL TERMS

Anchorbeams and Anchorbeam Tenons 6, 7
Axial Compression and Tension 46
Barefaced Tenon 28
Bending 46, 47
Beveled Lap 29
Birdsmouth 34, 35, 39
Bladed Scarfs 46, 47, 49
Blind-Housed Through Mortise and Tenon 4
Blind Mortise and Tenon 20, 21
Boarding Grooves 9, 16
Bridled Scarfs 49, 50
Broken Back Roof 43
Butt Cog 22
Canted Purlin Plate 40
Cantilevered Plate 14
Ceiling Joists 26, 27
Chase Mortise 26, 27
Cogs and Cogged Joints 12, 15, 22, 47, 48
Common Purlins 42, 44
Common Rafters 34
Corbels 32, 33
Diminished Haunch 25
Diminished Housing 3
Diminished Shoulder 10, 17, 30
Dovetail Tenons 5
Draw Bore 14
English Tying Joint 8, 9, 10, 17, 18, 19
Flush Lap Tying Joints 10
Flying Plate 17, 18
Floor Joists and Girders 22
Free Tenon 50, 51
Full-Housed Mortise 31
Half-Housed Mortise 31
Halved Scarfs 47
Halved and Tabled Scarfs 48
Hip Purlins 44
Housed Mortise and Tenon 24
Intermediate Sill Girder Joints 21, 22
Interrupted Plate 16
Inverted Lapped Full Dovetail 21
Joining Structures 50, 51, 52
Jowls 8, 9, 52
Kerf-Wedged Dovetail Through Mortise and Tenon 6
Knees 33
Kopbalkgebint 6
Lap Dovetails 10
Lapped Brace 32
Lapped Half-Dovetail 21
Lean-to Rafters 43
L-Mortise 26
Lookout 41
Moment 46, 47
Mortise and Tenon 14
Necked Tying Joint 6
Outriggers 17, 43
Packing Piece 31
Paired Tenons 26
Paired Through Mortise and Tenon 4
Passing Brace 33
Peak Joint 38
Pentice Roof 43, 44
Plank Sill 22
Principal Rafter-Common Purlin Roof 41, 45
Principal Rafter-Principal Purlin-Common Rafter Roof 40
Pulley Mortise 26, 27
Rafter-Plate Joints 34, 35, 36, 37
Rafter-Purlin Plate Joints 38
Rafter Tails 35, 36, 37
Raising Plate 10, 12, 17
Relish 2, 11, 16, 21
Ridge Beam 38
Ridge Board 39
Scribe Rule, Square Rule 3
Shear 46
Short Joist 26
Sill Corner Joints 20
Sloped Tabled Corner Lap 20
Soffit Tenon 25
Splayed Scarfs 48, 49
Spurred Shoulder 25
Squinted and Undersquinted Scarfs 47, 48, 49
Step-Lap 11, 13, 14, 36, 37, 39
Strengthened Halving 24
Strengthened Tenon 25
Stub Tenon 28
Studs 28
Summer Beam 25
Tenoned Braces 30
Tenoned Joists 24
Through Mortise and Extended Tenon 6
Through Mortise and Tenon 2, 20
Through Mortise and Tenon with Dovetailed Shoulder 5
Torsion (Twisting) 46
Triple Bypass Joint 16
Tusk Tenon 25
Tying Joists 23
Wedged Dovetail Through Mortise and Tenon 4
Whistle Cut 48

I. Tying Joints: Tie below Plate

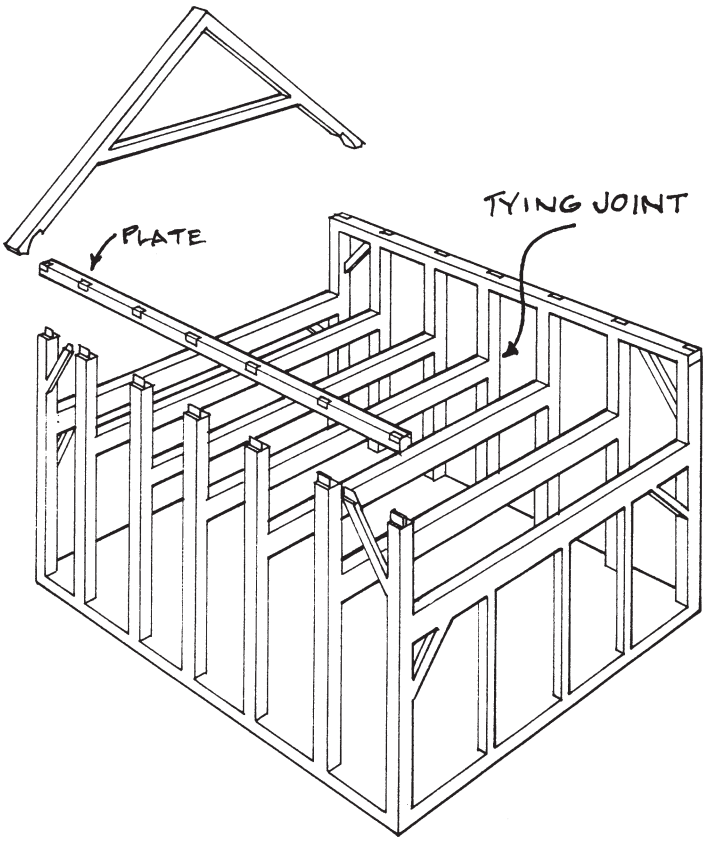

Fig.1. In the typical New York State timber-framed Dutch house, the plate is 3 to 4 ft. above the second floor. The closely spaced H-bents, typically 3 to 5 ft. on center, illustrate the tie-below-plate condition.

OF ALL the joints that make up a traditional timbered frame, the most important are the tying joints. Tie beams, also referred to as crossbeams, anchorbeams, ties and lower chords (in trusses), are transverse horizontal members that span from wall to wall or eave to eave, resisting the outward thrust of the roof planes. Where the tie beam joins the wall framing, we have the *tying joint*. Tying joints are usually the only connections in a frame that must resist tension. When a tie beam joins the feet of principal rafters, the result is a triangle, a rigid structural shape. In wide structures, rafters are often supported by purlin plates somewhere in midspan, and their effective span is thus shortened (see Fig. 2). Support by purlin plates normally reduces outward thrust of the rafter at the plate and consequently the load on the tying joint. But wind loads can cause bracing to exert tension loads on the tying joint. In aisled structures, the tie beams may not be continuous across the entire width, but may span only from aisle post to aisle post. Of all the joints in a timber frame, the tying joints especially must be of good structural design and each one well crafted (there is no redundancy).

Because of their complexity and variety, tying joints may conveniently be divided into two groups: tie below plate and tie at plate. This article will focus on the former group.

The tie below plate, or *dropped tie* as it is often called, joins the wall posts below the plate. Its connections are generally simpler than those of the tie at plate and probably its configuration is the more widespread. Since it lies below the plate, occasionally several feet, and the rafters join to the plate, it doesn't create the nice triangle with the rafters that engineers like to see. The rafters carry roof thrust to the plate. The plate transfers the load to the posts. The posts are joined by the tie beams. Each joint must be sufficient to carry the load, and the post must not break.

If the load path is convoluted, why did the arrangement arise? In traditional timber framing it is often simpler and stronger to stagger joints. When a joint is cut in a timber, wood is removed and the timber's strength is diminished. Joining multiple members at the same location often creates complex joinery and can weaken members excessively. Raising the plate a foot or two above the tie avoids this problem, and raising the plate several feet above the tie also makes the space under the roof more usable.

The Through Mortise and Tenon (Figs. 3-5). Probably the most prevalent tying joint in America, the through mortise and tenon was the standard joint in the carpenter's repertory where a joint was subject to tension loads. The mortise is cut completely through the post to maximize the tenon length. Because the connection relies entirely on the pins to resist withdrawal, pin size and location are critical. Failure of this joint can occur in five ways:

1. The pin can shear off (pin too small or decayed), and the joint withdraws.
2. The wood in the tenon between the pin hole and the end of the tenon, called the *relish,* can split out (tenon too short or pin hole too close to end of tenon), and the joint withdraws.
3. The mortise face can split out (pins too close to face), and the joint withdraws.
4. The post can split in a line from the pin hole up to the post's top tenon (joint too near the post top), and the top portion of the post breaks away.
5. The post can break off at the tying joint (too much cut out of the post).

Generally, through tenons are used to maximize the relish in the tenon beyond the pin hole, but a few blind (not through) tenons have been found. The use of two or more pins is common, often not in line to avoid mortise face splitout. Some typical pin placements are illustrated in Fig. 5.

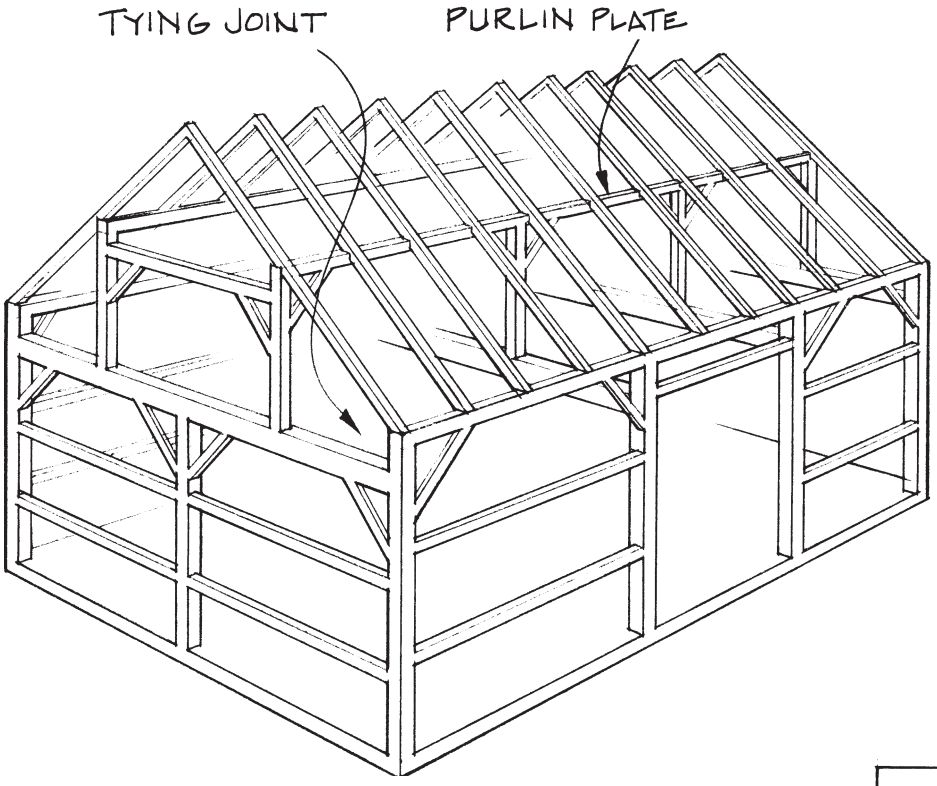

Fig. 2. The three-bay, side-entrance barn, common throughout western New England and New York after about 1800, made use of the tie-below-plate tying joint. The rafters were additionally supported by continuous purlin plates at their midspan.

In most buildings, this joint is housed because the tie beam often carries floor loads. Instead of the tenon alone, the full width of the beam bears on the post; a substantial increase in bearing as well as shear strength is accomplished. A diminished housing is typical in scribe rule frames, a parallel housing in square rule frames. (Square rule frames are marked and cut according to a system in which a smaller, straight and square timber is envisioned within each real, irregular timber; all joints are cut to the surfaces of the imagined inner timber, such that standardization is possible for similar pieces, and assembly is necessary only once, at the raising. Scribe rule frames, on the other hand, are built according to an older system that custom-fits each timber to an adjoining one, a process that requires arranging the individual pieces on a framing floor and assembling and disassembling large parts of the frame before raising the whole.) Because the diminished housing retains more wood on the post and allows more relish in the tenon behind the upper pin hole, it makes a marginally stronger connection. The depth of housing in a scribe rule joint is typically consistent within a frame and is commonly 1 in. In square rule framing, many joints appear to be housed to some depth simply as a consequence of the system, but load-bearing tying joints will have noticeably deeper housings.

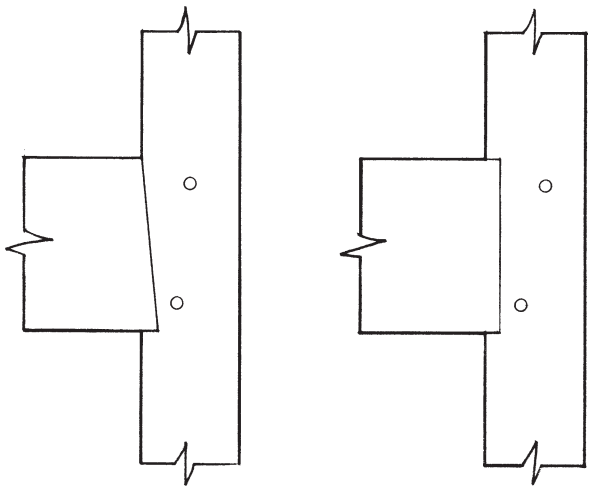

Fig. 4. The two basic types of housed through mortise and tenon joints. The diminished housing (on the left) was primarily used in scribe rule frames. The parallel housing (on the right) is found in both scribe rule and square rule frames.

Fig. 3. The through mortise and tenon. In its most basic form, it handles moderate loads. This simple tying joint occurs in countless buildings of every period and nationality.

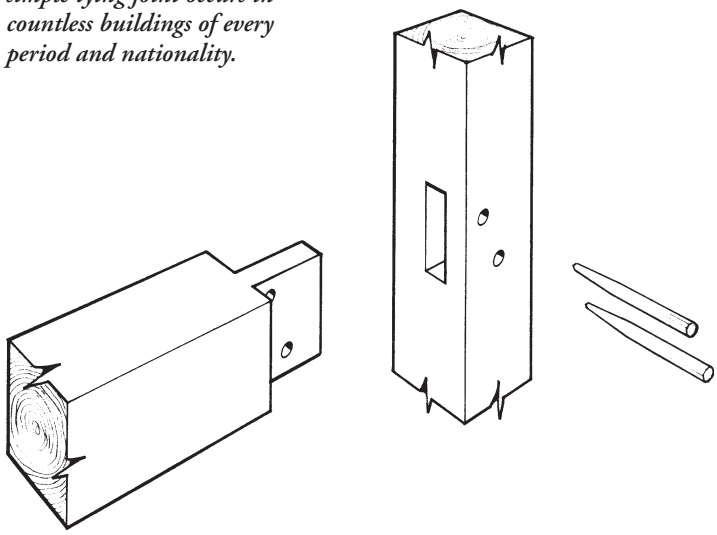

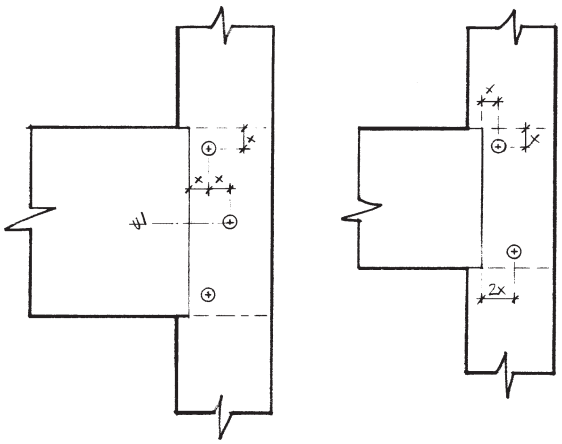

Fig. 5. Pin number and placement varied with the size of the member and the preferences of the builder. Members 6 in. deep or smaller (not shown) usually have one pin; 7 to 10 in., two pins; and above 10 in., three pins. The distance shown as "x" is often either 1½ in. or 2 in., based on the tongue or blade of the framing square used by the builder.

Blind-Housed Through Mortise and Tenon (Figs. 6 and 7). When the post face is wider than the tie beam, the tie beam is often housed into the post. It may be set flush with the layout face of the post (for example, the outside face of an outside post) or centered. A wide post can minimize breakage at the joint. Occasionally a tie beam is reduced in width at its end to allow for a blind housing. This extra wood retained on the post adds considerable strength compared with a post whose face has been cut right across to form an open housing.

Paired Through Mortise and Tenon (Fig. 8). In frames with larger members, paired or twin tenons were occasionally used. Such a configuration will likely outperform a simple mortise and tenon, with reduced tendency for pin shear and mortise face splitout. However, the advantage must be judged against the substantial additional work in the cutting of the joint. Paired tenons are sometimes found in mill structures, barns and large wooden machines like cider presses.

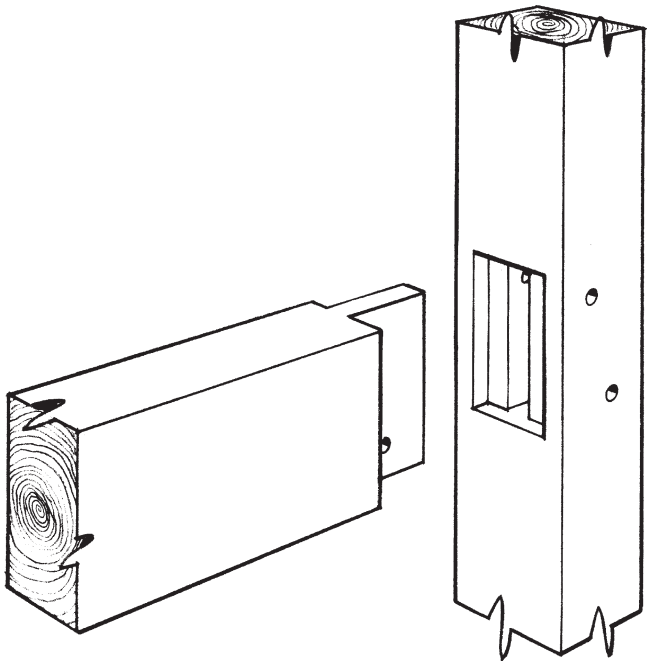

Fig. 6. In a blind-housed through mortise and tenon, the tie beam may be flush with one side or centered as shown. The uninterrupted long grain flanking the joint on the post resists mortise face splitout and breaking at the joint .

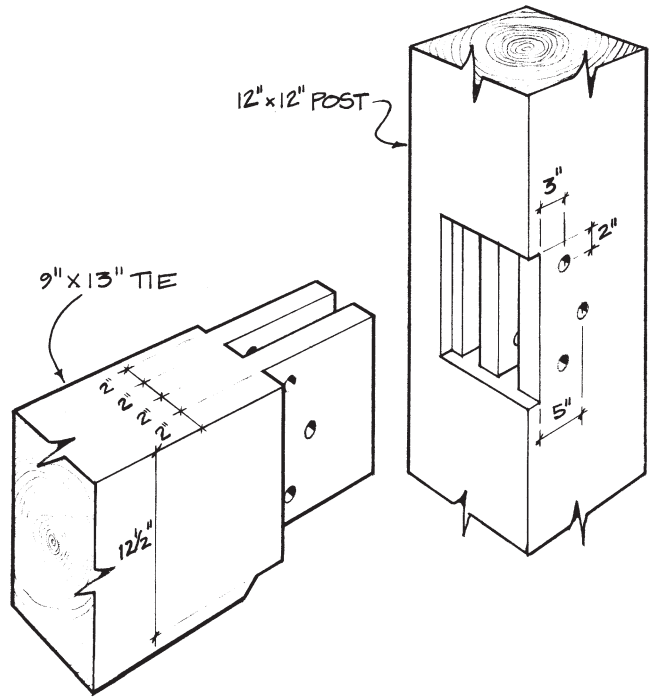

Fig. 8. Paired or twinned through mortise and tenon as found in a ca.-1840 barn in Middleburg, New York. The joint is housed flush with one side. As is typical of square rule structures, the tie beams are reduced to a consistent depth (here 12½ in.) at the joint. This rugged connection has well resisted the forces in the 50-ft.-wide barn.

Fig. 7. Occasionally, the tie beam end is reduced in width at the housing. In some cases, it is done to square up an irregular or twisted beam end, in others to remove as little wood as possible from the post. Considerable wood can be removed from the side of the tie beam without creating a shear problem.

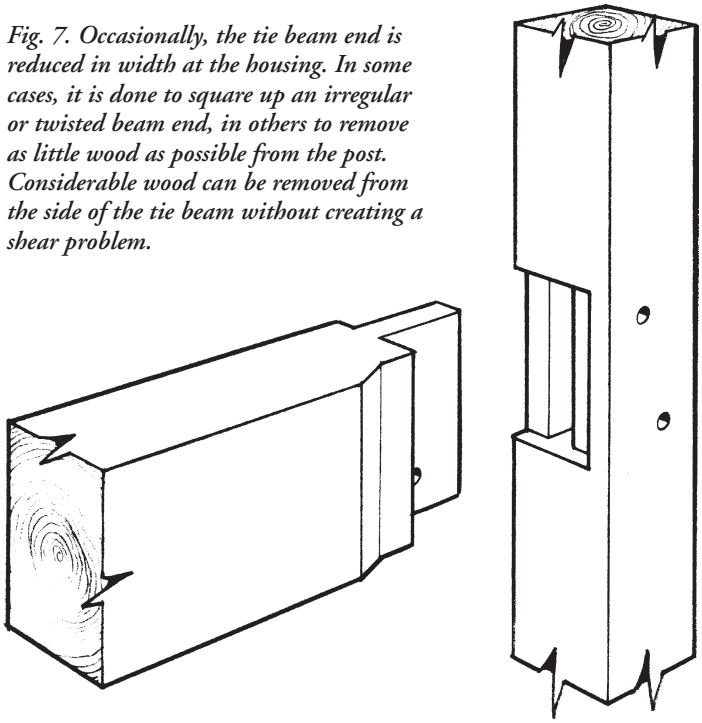

The Wedged Dovetail Through Mortise and Tenon (Figs. 9 and 10). This joint is arguably the strongest to use in this particular application. It does not rely upon pins to resist tension. Instead, the bottom of the tenon is angled to form a half-dovetail as shown in the photo (from a late-18th-century barn, Great Barrington, Mass.). The mortise is extended above and also angled to permit a wedge to be inserted from the outside of the post. Though pins are used to bring the joint tight, the wedge-and-dovetail configuration does the work. If worked in green timber, shrinkage will allow some withdrawal. However, in many old frames with this joint, the connection is still snug. This is probably due to the speed at which timber ends dry. Much of the tenon's shrinkage has already occurred prior to assembly even though the interior of the timber a few feet away may still be saturated with water. Ordinarily it is difficult or impossible to drive the wedge further after the exterior skin is applied. Though this joint involves more work than the basic one, it is certainly worth the effort. It has been found in buildings of all nationalities and types and from every period.

The Through Mortise and Tenon with Dovetailed Shoulder (Figs. 11 and 12). A local (Columbia County, New York) variation of the wedged dovetail joint has the dovetail on the tenon continue into the housing which, because of the flare of the post, is about 3 in. deep. Only two buildings have been found with this joint. Judging by their location and similarities, they are likely the work of the same builder. The drawback to this joint would be the potential for the tie beam to fail in shear where it is notched to fit the housing. Apparently the load on the joint in this 28-ft.-wide barn is matched by the heavy oak tie beam, for nothing has failed in over 200 years.

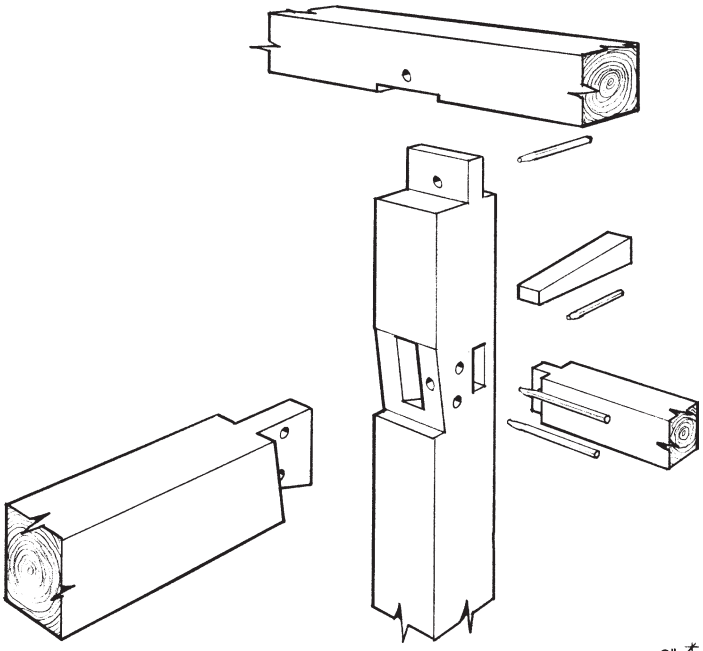

Fig. 9. Above, exploded view of wedged dovetail through mortise and tenon in a late-1700s three-bay 30x40 English-style barn in Adams, Massachusetts, framed almost entirely of beech.

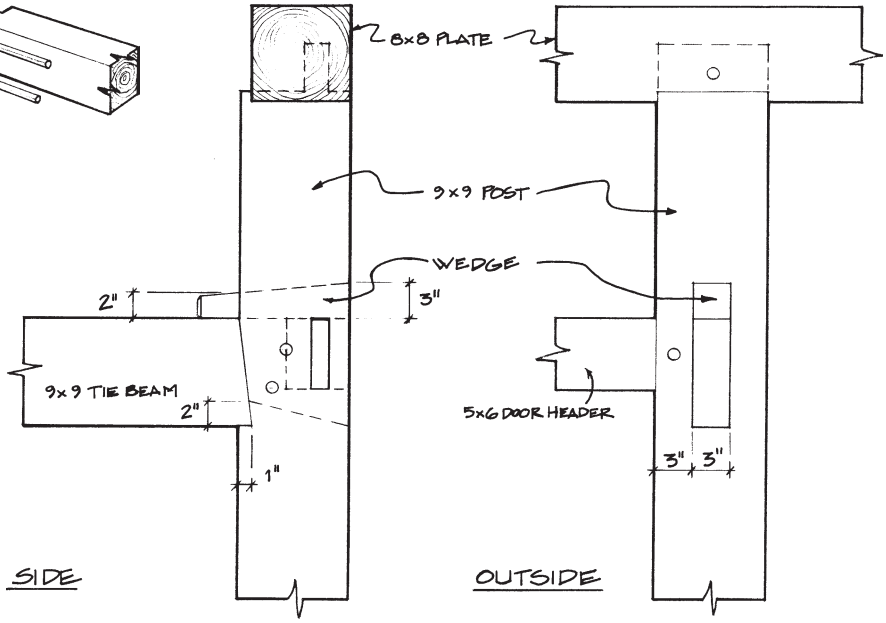

Fig. 10. At right above, side and end views of the same joint with dimensions. A door header joins the post at the same height as the tie beam.

Figs. 11 and 12. Below and below right, assembled and exploded views of a wedged dovetail through mortise and tenon with dovetailed housing, as found in a 28x34 three-bay side-entrance barn in East Chatham, New York, probably dating from the second half of the 18th century. This unique joint has exceptional tensile strength.

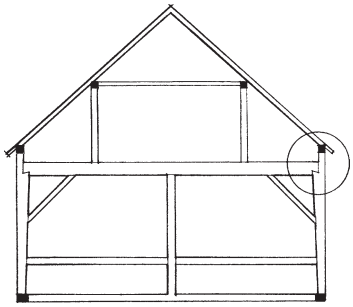

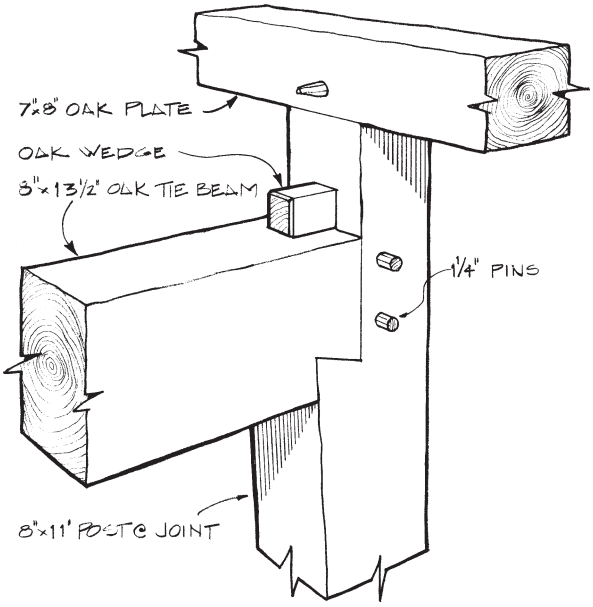

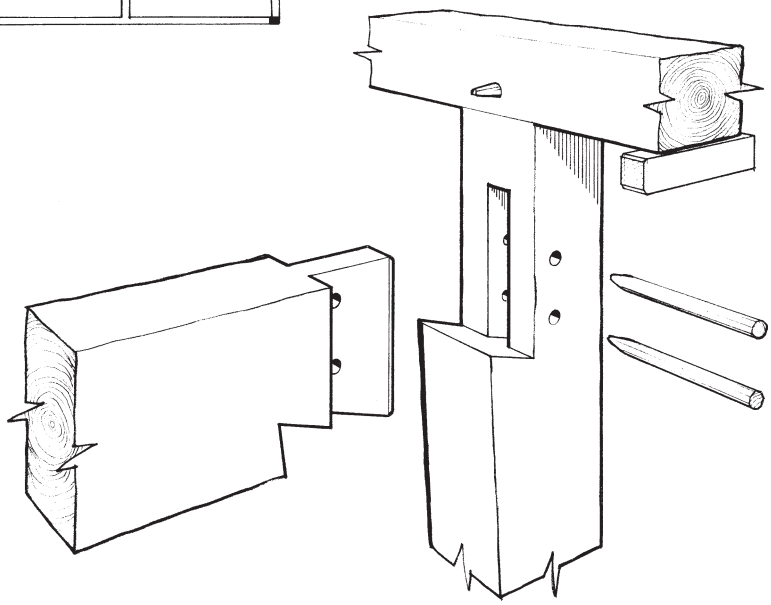

The Kerf-Wedged Dovetail Through Mortise and Tenon (Fig. 13). A variation allows a basic tenon to become a full dovetail. Kerfs are sawn near the edges of the tenon, and wedges are driven in to expand the tenon to fit a dovetail-shaped mortise. The kerfs are not parallel to the tenon edges, but angled away from the edge to avoid creating a splitting plane in the tie beam tenon when the edges of the tenon are bent away to follow the splay of the mortise ends. The advantage of this type over the wedged half-dovetail is that the tenon is not reduced in cross-section to create the dovetail. The disadvantage is that the angle of the dovetail must be shallow, and thus it will be affected relatively more by shrinkage of the tenon. In the illustrated example, the tenon flares only ¼ in. on the top and bottom. After seasoning and shrinking of the members, the two pins may be carrying the entire load. It would seem that seasoned timber is necessary to use with such a subtle dovetail flare. I have found only two timber examples, though the joint is common in furniture.

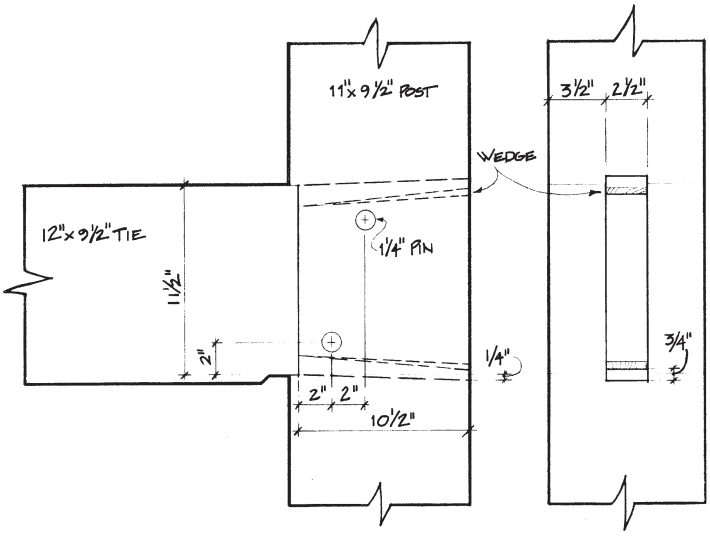

Fig. 13. Kerf-wedged dovetail through mortise and tenon joint found in the upper floors (after 1810) of the Machine Shop at Hancock Shaker Village, Hancock, Massachusetts. It was used for both the tying joints and the queenpost trusses. This joint is much more common in furniture than in framing. Because of shrinkage in the height of the tenon, the wedges are loose, indicating that the pins are carrying the load.

Through Mortise and Extended Tenon (Figs. 14-16). When the building is aisled as in Dutch barns, the primary tying joints typically occur at the posts that flank the central aisle. These posts are joined by an *anchorbeam,* creating an H-shaped bent. The side aisles are treated as lean-tos and gain their strength from the H-bent. Since the tying joint is now interior, the tenon can be extended for additional strength without being exposed to the weather. (In Europe, such tenons are often exposed on the exterior of buildings.) Adding a foot or so of tenon prevents relish failure. By adding wedges through this tenon, all five potential modes of failure mentioned earlier are effectively eliminated save one: where the post breaks at the tying joint. The wedges can be driven additionally after the building is finished and the wood seasoned. The only disadvantage is that an additional 2 ft. or more of length are required on the anchorbeams, typically the largest timbers in a building. (Sections 12 by 24 in. are not uncommon.) The profile of the tenon varied with the builder.

This joint is synonymous with Dutch barn framing and can be found in hundreds of buildings throughout the area first settled by the Dutch, primarily New York and New Jersey. However, it was not the only tying joint used in Dutch barns, nor was it used only in Dutch framing.

Necked Tying Joint (Fig. 17). Referred to in The Netherlands as a *Kopbalkgebint*, this joint also extends beyond the post for great strength. It may be used in non-aisled structures and still be protected from the weather as it can be tucked under an overhanging roof. The tie beam end resembles a head and neck. The tenon or neck fits in a slot cut in the top of the post to make a form of bridle joint. The post has paired tenons into the plate. This ingenious joint could hardly be improved upon. Its only disadvantage is that its location is fixed at just below the plate. It also requires posts wider than normal to accommodate the extra joinery. Only three American examples have been documented, two in Dutch barns in Blenheim and Schoharie, New York, the third in a three-bay "English" barn in Warren, Vermont.

This unusual tenon profile appears on three Dutch barns in Coeymans, N.Y., likely the signature of a particular builder.

Fig. 14. Below, a through mortise and extended tenon as found in an 18th-century 47x45 Dutch barn in Root, New York. Two pins and a single wedge secure this housed version. Note that the pins are not equidistant from the top and bottom of the tenon. Perhaps this was done to reduce the tendency of the 24-in.-deep white pine anchor beam to lift off the shoulder as it shrank.

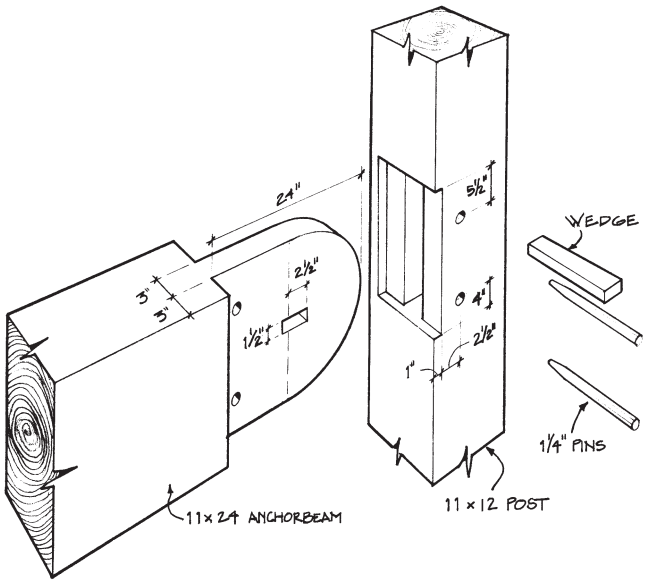

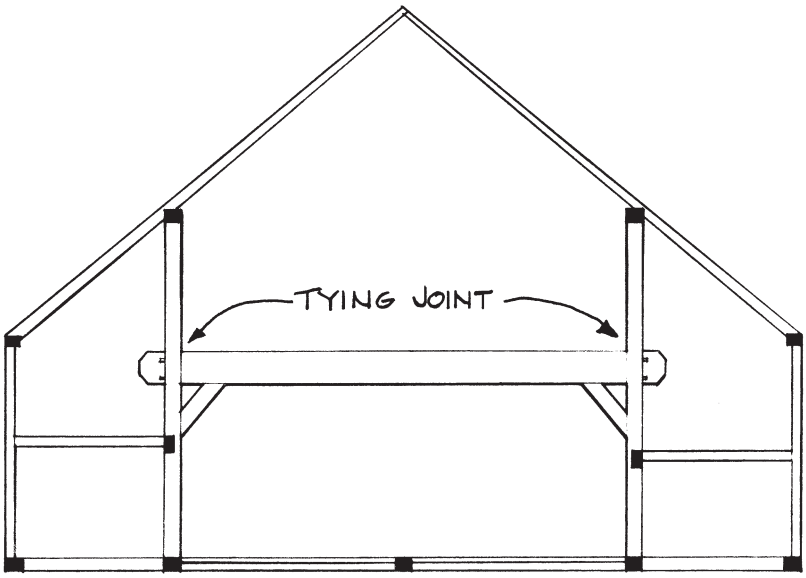

Fig. 15. The New World Dutch barn is an aisled building. The structural core is the H-shaped bent, each composed of aisle posts and an anchorbeam with heavy braces. Because the tying joint is interior, the tenon can be extended without being exposed to the weather.

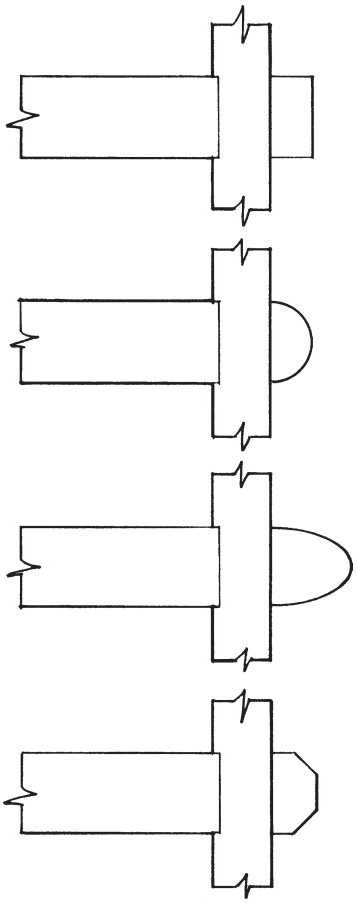

Fig. 16. Common variations on the shape of the protruding tenon. All versions have been found with two wedges, one wedge or no wedges.

Anchorbeam tenon ends from a pre-1820 Dutch barn taken down in Altamont, New York.

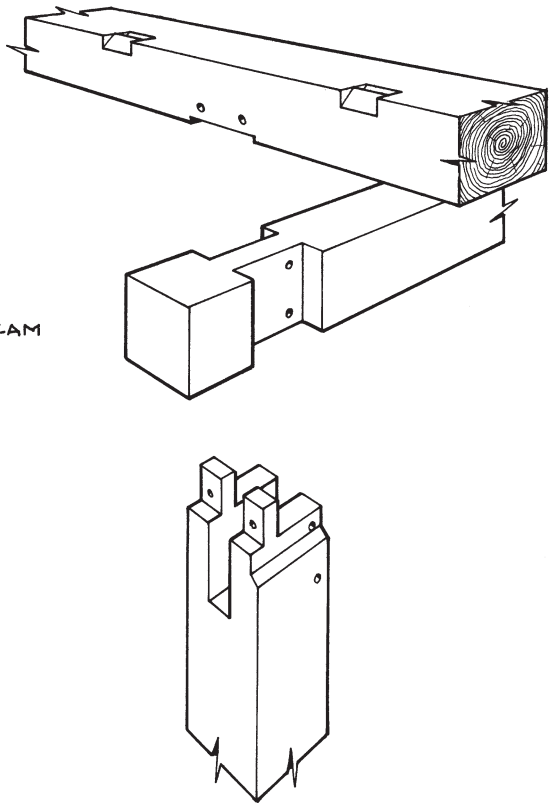

Fig. 17. Assembled and exploded views of a necked tying joint in a ca.-1840, 30x40 English barn in Warren, Vermont. The 9x9 tie beam has a 3-in.-thick neck secured as a normal through tenon with two 1-in. pins. The head protrudes 8 in. past the post. Two, 2-in.-thick tenons secure the post to the plate. Since this frame was cut using the square rule system, the joint is housed into the plate. Roof thrust is additionally resisted by the plate bearing directly against the head of the tie beam.

II. Tying Joints: Tie at Plate

THE tie-at-plate category encompasses the most complex and varied of timber joints, including not only wall, roof and cornice work, but also attic floor framing. Builders often used components to double advantage. Floor joists, for example, could become additional tie beams. Some tying joints could be considered "secret" joints since their configuration and method of assembly are a mystery until they are disassembled. In houses they are often difficult to document *in situ* because of their dusty, cluttered location in the attic. Many of the examples included here were wonderfully revealed during dismantling or restoration of old structures.

If plate-level tying joints were so complex, why did builders cut them? There were compelling reasons for carpenters to make the tying joint at the plate. Structurally, for resisting the outward thrust of the roof, it's hard to improve upon the rigid triangle formed when the rafters tenon directly into the tie beam. A rigid triangle at each cross-frame maintains the integrity of the roof marvelously. Second, during the scribing process (and most plate-level tying joints are from the period when frames were laid out on the ground and scribe-fitted), it was a procedural advantage to have the ties and plates at the same height and joined to each other. Finally, in early American barns the tie was often put at plate level for aesthetic reasons. In vertically boarded barns, the gable end boarding was usually lapped at the tie beam, forming a shadow line on the exterior (Fig. 4 and photo at right). Architecturally, it was more pleasing to have the shadow line at the eave height than a couple of feet lower as in the dropped-tie barns typical of a later period. In fact, even in many dropped-tie barns, the end ties were framed at eave height to create the preferred exterior look.

THE ENGLISH TYING JOINT (Figs. 2 and 3). Since the 1200s, this has been the tying joint favored in the British Isles, where it is commonly referred to as "normal assembly." In English-speaking colonies here, it became the standard for houses and barns until about 1800 and the advent of square rule layout. (See page 3 for a brief description of this method.) The joint was then used occasionally until the waning of timber framing in the early 1900s. In story-and-a-half houses with a second floor kneewall, it was used for the corner tying joints across the ends, while the dropped tie was used on interior bents.

In its perfected form, the tie beam joins the plates with lap dovetails and is supported by jowled (gunstock) posts that tenon into both tie and plate. The rafters tenon into the top of the tie beam, forming a nice triangle and resisting outward roof thrust. The shallow lap dovetail in the underside of the tie beam, typically 1 to 2 in. deep, resists additional thrust put on the plate by intermediate common rafters and wind loading. To keep the lap joint together under wind loading and possible twisting action from drying, the tie beam is secured to a tenon (the teazle tenon, Fig. 3) in the top of the post jowl. The required extra width for the jowl at the post top was obtained by hewing from the natural swell of butt logs. The swelled end with its stronger fibers was placed up. In 17th-century houses, these jowls were often decorated with carved moldings. In later houses where the framing is encased by boards, the post tapers evenly from sill to tie.

Boarding lapped at tie beam.

The plate typically projected in length beyond the end wall of the building to provide relish past the dovetail. Though protected by the overhanging roof, a projecting plate end would still suffer from exposure. One solution was to extend the gable wall above the attic floor to conceal the joint. A different way to provide plate relish was to narrow the dovetail width toward the inside edge of the tie beam, as far as practical (Fig. 6-4, overleaf). Or, instead of a dovetail, a cog was used that didn't require plate relish at all (Fig. 4). The cog also avoided another intrinsic problem of dovetails, namely shrinkage. In England, with its higher equilibrium humidity, shrinkage is likely less of a problem. But high initial shrinkage of the dovetail, exacerbated by American temperatures and humidity swings, allows the plate to move outward under pressure, especially from any common rafters placed between the trusses. The result can be to split posts down the jowl, since the plate pushes on the back of the post and the teazle tenon in the front is restrained by the mortise in the underside of the tie beam. Many jowled posts are reinforced with iron today.

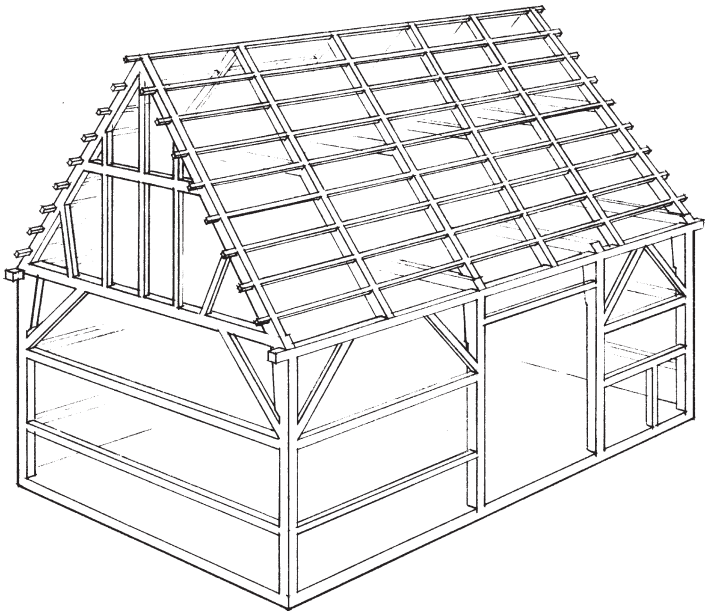

Fig. 1. Side-entrance three-bay 23x32 barn in southeastern Massachusetts, ca. 1680. Steep 52-degree roof has 2x3 common purlins 24 in. on center trenched through rafters set about 6 ft. apart. A collar beam joins each pair. One tie beam, oddly, doesn't receive a rafter pair.

Fig. 2.

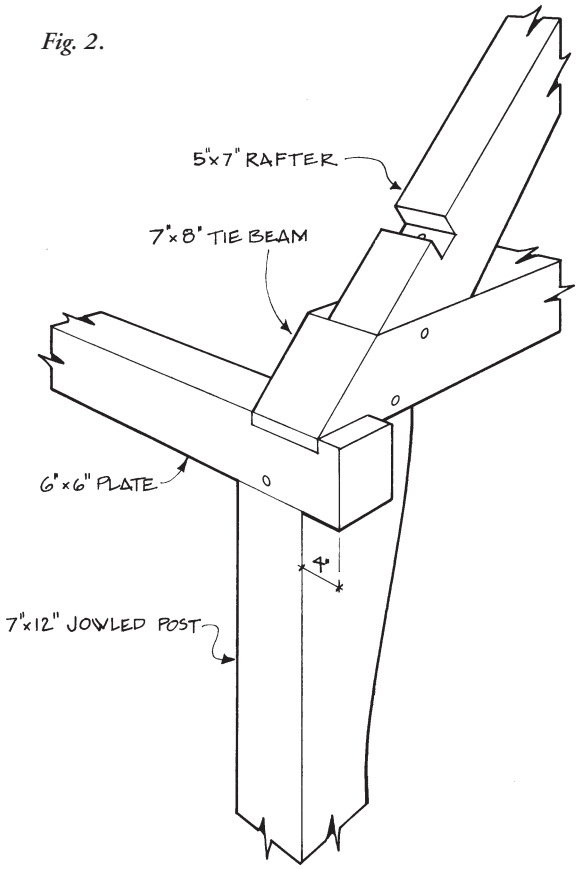

Fig. 3.

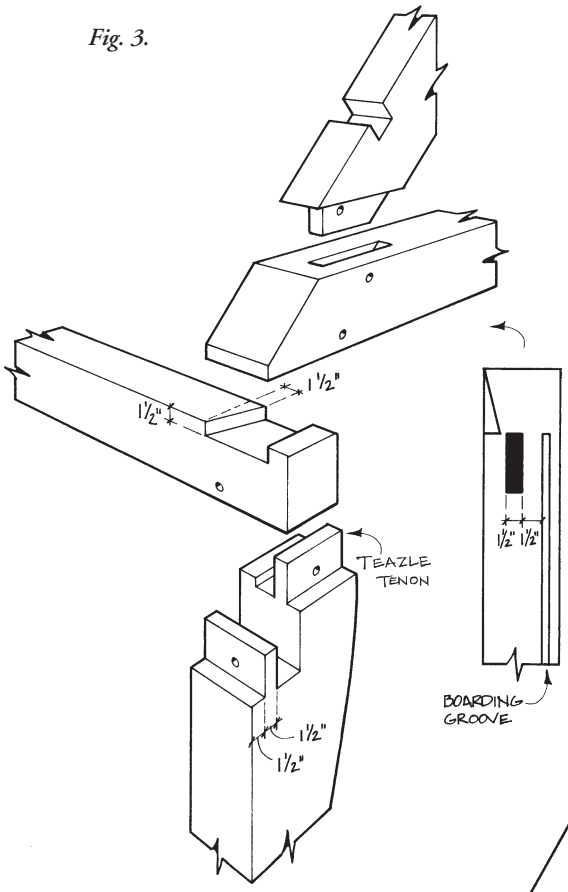

Figs. 2 and 3. English tying joint with half-dovetail at the gable end, assembled (Fig. 2) and exploded (Fig. 3) views. The plate, originally longer, now extends only 2 in. past the tie beam. A groove in the underside of the tie (Fig. 3) accepts the boarding.

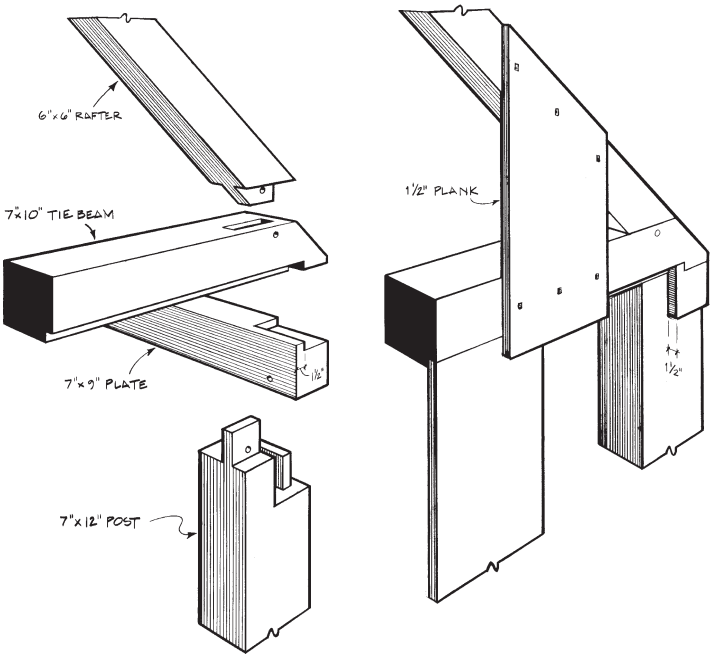

Fig. 4. Full-width cog (1½ in. square section) found on the corner joints in a 1773 three-bay 28x36 barn in Adams, Massachusetts. This barn has dropped tie beams on interior bents. Note lapped end-boarding.

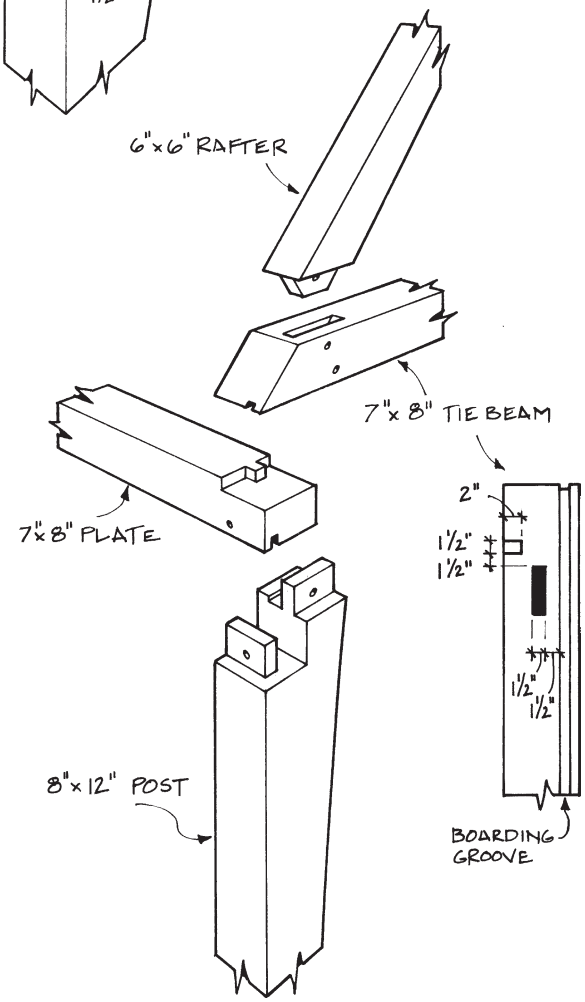

Fig. 5. Corner tying joint from a 30x42 barn (1715) in Uxbridge, Massachusetts, with cog instead of dovetail to address the plate relish problem. Both plate and tie are grooved for vertical boarding.

To reduce stress on the posts, some builders added more tie beams, one for each rafter pair. Thus each rafter pair makes a rigid triangle and there is no longer any thrust on the plate. Each tie functions as an attic floor joist, sometimes spanning the width of the house. In wider houses, the intermediate ties framed to a summer or spine beam, shortening the span. The principal tie beams were the full width of the house and often in conjunction with jowled posts. Extending all these tie beams over the plate could support a boxed-in cornice. The ties could be dovetailed, notched or cogged over the plate.

Other variations of these joints where ties and joists lap over the plate can be found in Tidewater Virginia. Here, the attic floor level is a few inches above the plate. The tie beams are lap dovetailed, and the joists simply notched to go over the plate. A raising plate, originally a timber but later a plank (Fig. 8), is nailed across the tie and joist ends for the rafters to bear on as in three of the flush lap examples described later. (See "The Eighteenth-Century Frame Houses of Tidewater Virginia," by Paul E. Buchanan, in *Building Early America*, ed. Charles E. Peterson, 1976. For additional New England variations, see Isham and Brown's *Early Connecticut Houses,* Cummings' *Framed Houses of Massachusetts Bay, 1625-1725* and Kelly's *Early Domestic Architecture of Connecticut.*)

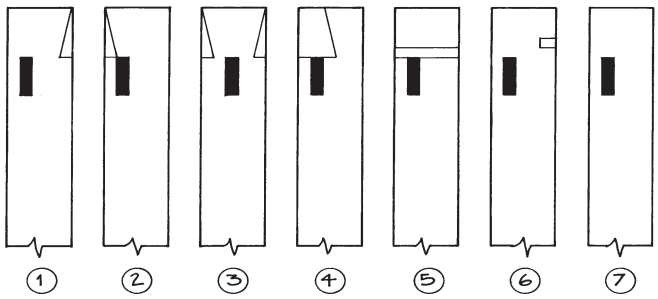

Fig. 6. Undersides of tie beam ends showing half-dovetails (1, 2, 4), full dovetail (3), cog types (5, 6) and one example (7) merely trenched across the plate.

FLUSH LAP TYPES. In houses, it's desirable to have the top of the tie beam flush with the top of the plate. But in frames with the traditional English tying joint, the attic floor is level with the top of the tie beams and thus several inches above the top of the plates (Fig. 2). In medieval times when the tying joint originated, rooms were open to the roof and there was no attic floor to consider. Inserting an attic floor at tie beam level creates a somewhat awkward appearance at the plate (photo page 18).

The ceiling-wall junction is much cleaner when both the top of the tie and the top of the plate are in plane and, if the ceiling is to be plastered, when both timbers are the same depth. To gain this effect, various lap joints, some using dovetails, some with cogs, were developed over time. Many tying joints still used jowled or tapered posts to secure the lap. There was much experimentation. New joints emerged, and often more than one type appeared within a building. A few buildings have four different types! End joints were different from intermediate joints. Sometimes the front eave of the building had a different cornice from the rear. As the jowled or tapered post gave way to a post with a single top tenon, the joints became simpler.

Though strong enough in tension, these lap joints appear too weak to carry vertical loads. Often bearing only on its tenon, the tie beam receives no direct support from the post. However, such tie beams and plates are typically supported by plank partitions or timber studs, often for their whole length.

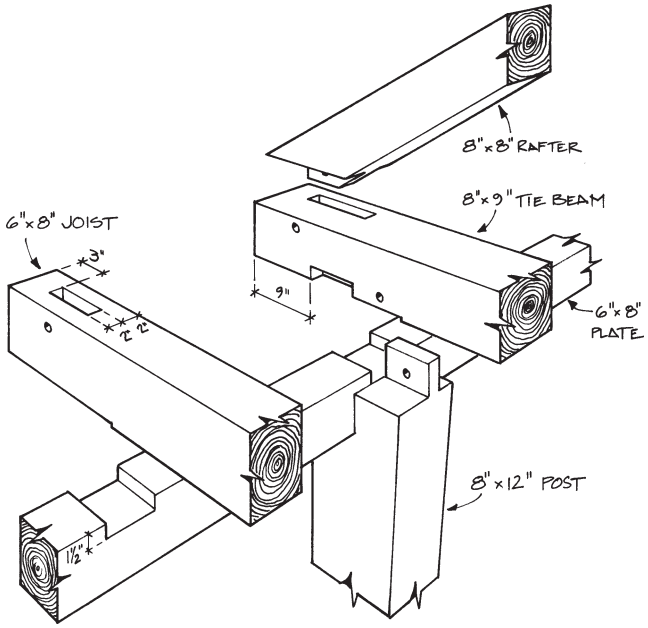

Fig 7. In this early 19th-century 32x40 two-story house in Washington, Massachusetts, rafters tenon equally into tie beams and joists, which extend 9 in. past the plate for a boxed-in cornice. Principal tie beams sit on tapered posts and are cog-lapped over the plate. Joists do not run the full width of the house but frame into a central summer beam; they are notched through the plate without cogging. Roof purlins framed between principal rafters support the commons at midspan.

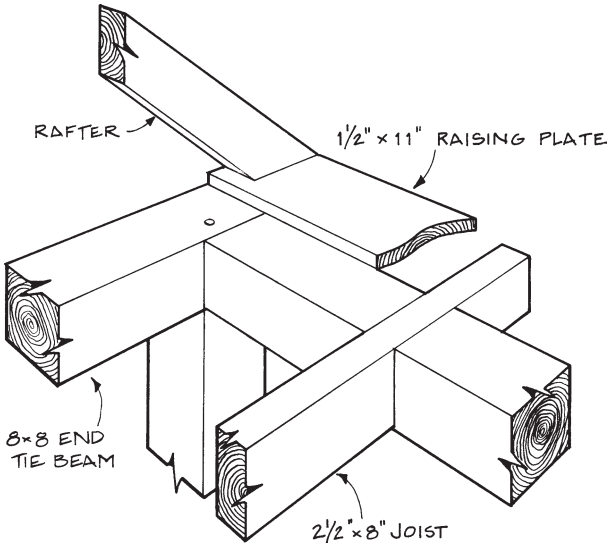

Fig. 8. A plank called a raising plate was sometimes nailed to both ties and joists, and rafters were nailed to it in turn. Attic floor boards butted to the plank. This arrangement was found in a 1791 house formerly standing in Cheshire, Massachusetts.

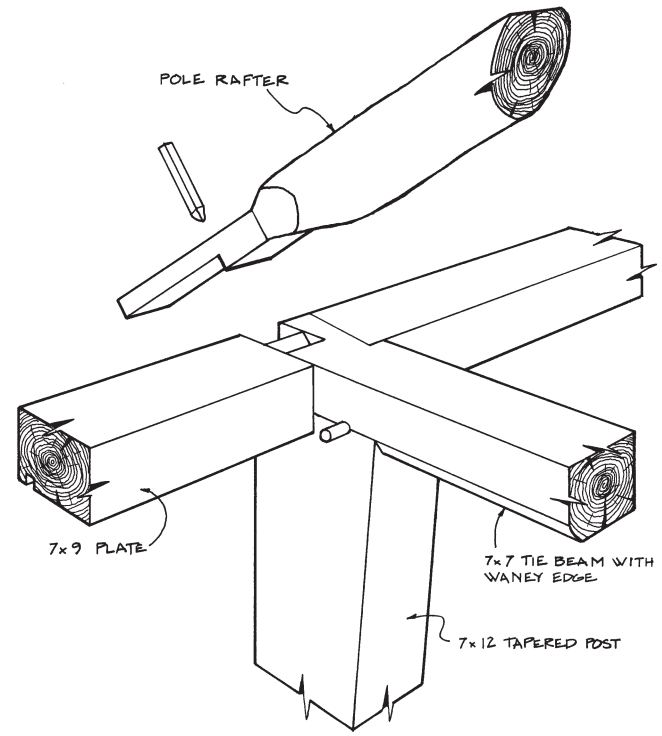

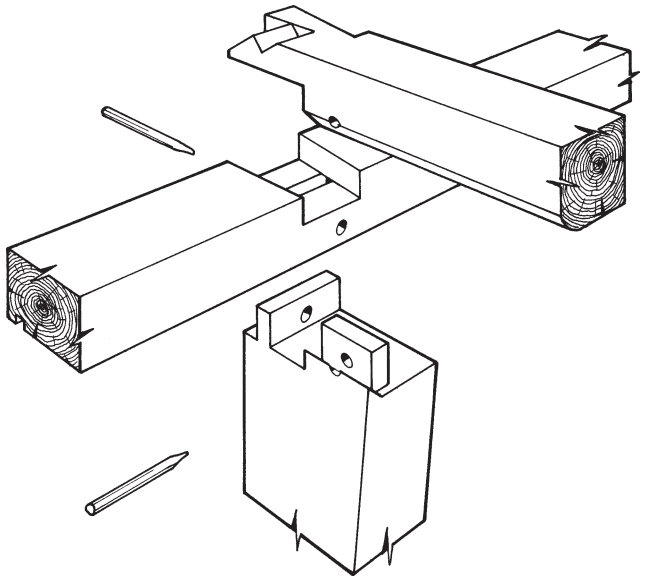

Figs. 9 and 10. This tying joint is found in a 28x38 three-bay, pre-1812 English barn in Goshen, Massachusetts. All of the tying joints are of this type. Instead of the rafter tenoning into the tie (as is more common), it is step-lapped, as are the intermediate common rafters to the plate. The post is scribed to meet the waney edge of the tie beam. (The corner joints are the same, without relish past the dovetail, but with rafter pins extending through the dovetail into the plate.)

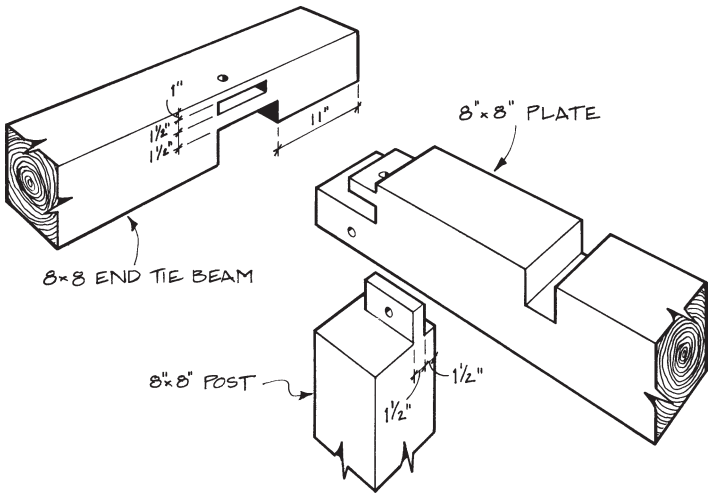

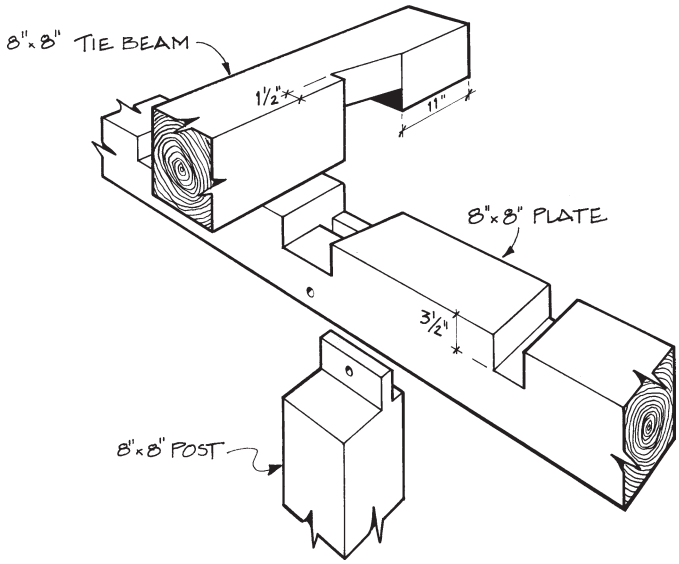

Figs. 11 and 12. In the 1791 Cheshire house (photo page 19), a 30x40 Cape, non-jowled posts terminated in a single top tenon. Tie beams and floor joists extended 11 in. at the front eave to support a boxed-in cornice. At the front corners (above left), a combination of lap, tenon and overhanging tie avoided the plate relish problem. The two intermediate tying joints on the front wall (above right) were lap dovetails. Curiously, one had the dovetail reversed: a mistake?
All the floor joists notched through the plate for additional tying. At the rear wall (not shown), there was no overhang. The intermediate tie beams joined the plate with a straightforward, 4-in.-deep horizontal mortise and tenon instead of lap dovetails; at the corners the joint was the same as the front but without the 11-in. projection.

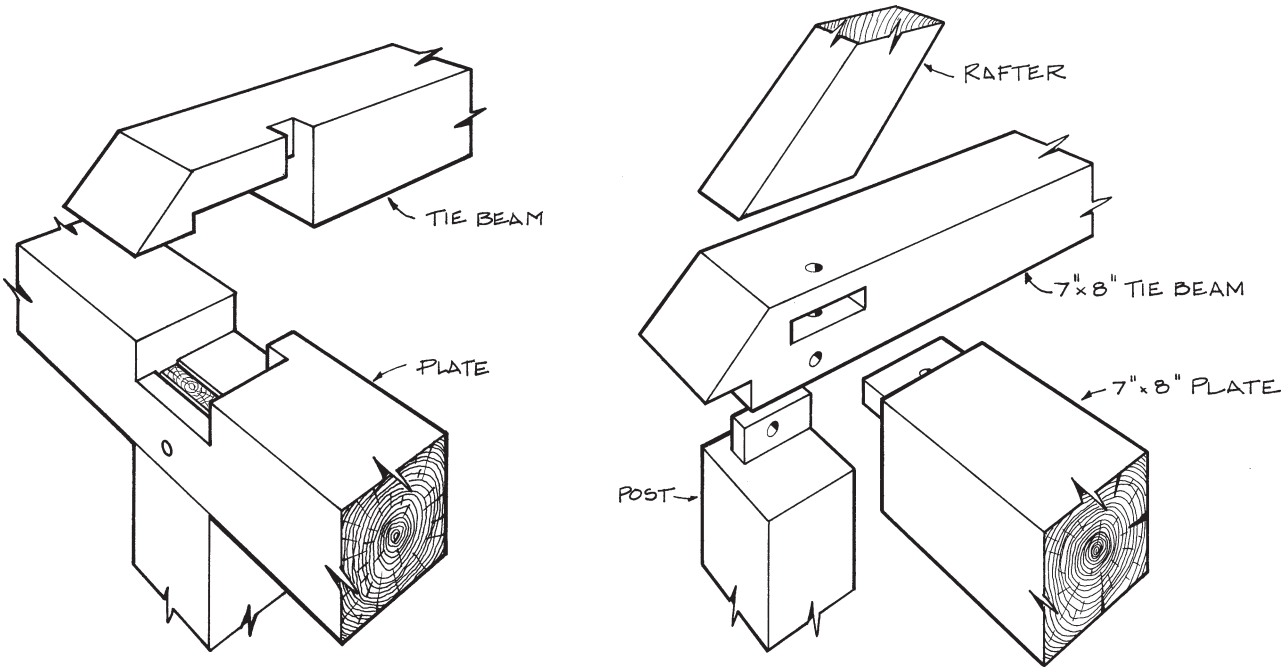

Figs. 13 and 14. Two-way cog, 2x2½x3, in a lap joint in a pre-1810 house, 26x27, in North Adams, Massachusetts. The tie beam end was notched on the bottom and the side to engage the plate. Joists and ties extended about 7 in. to frame a cornice. At right, the end condition. A simple mortise and tenon is substituted for the lap. Rafters were butted and nailed.

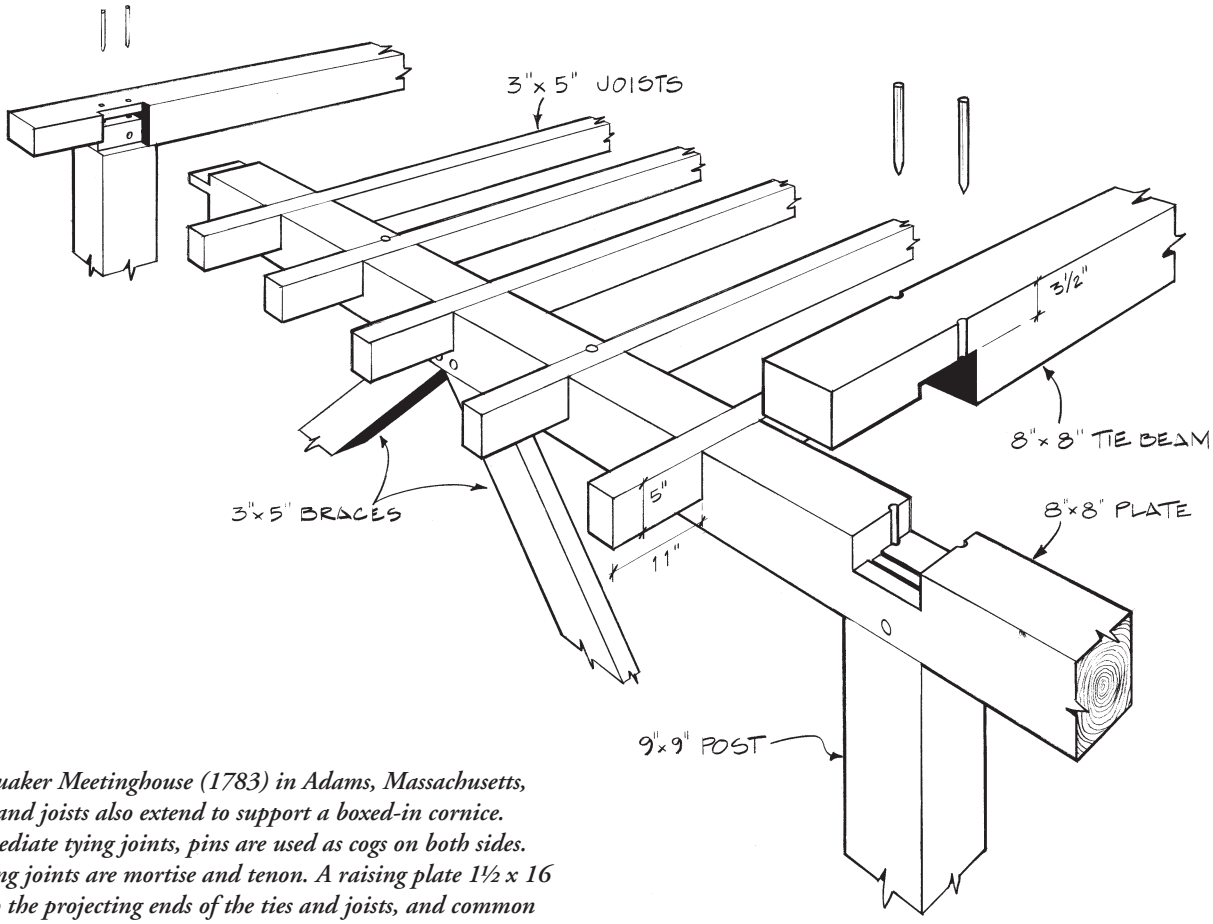

Fig. 15. Quaker Meetinghouse (1783) in Adams, Massachusetts, where ties and joists also extend to support a boxed-in cornice. On intermediate tying joints, pins are used as cogs on both sides. Corner tying joints are mortise and tenon. A raising plate 1½ x 16 is nailed to the projecting ends of the ties and joists, and common rafters, each pair with a collar, are nailed to the plate.

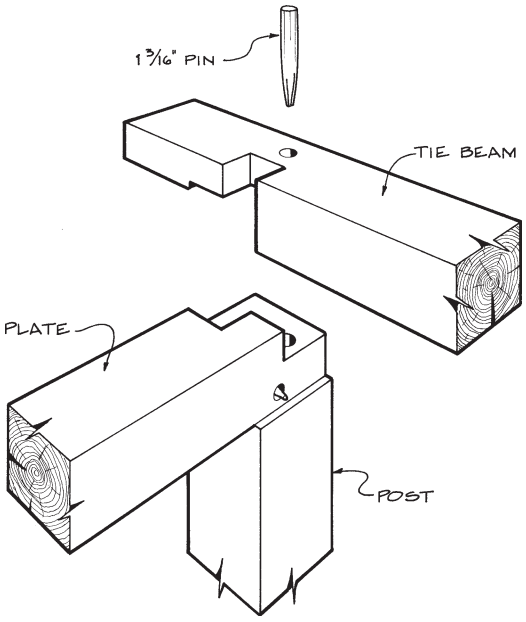

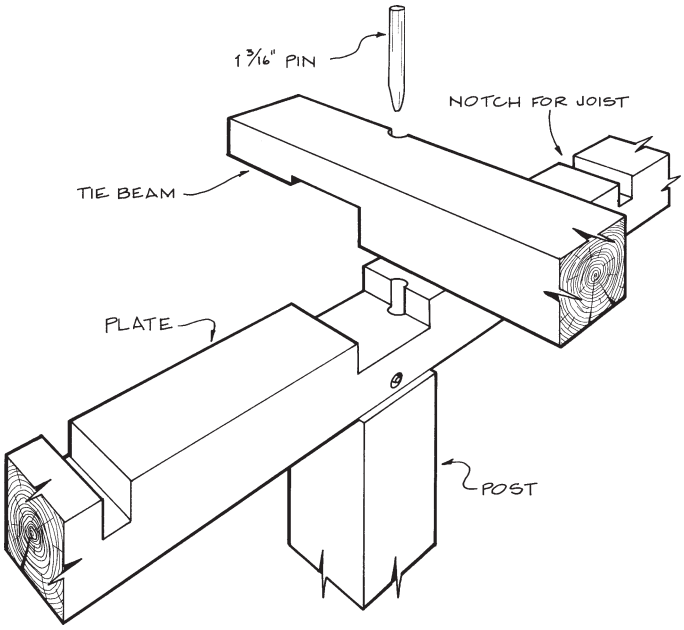

Figs. 16 and 17. Adams, Massachusetts, house (1785), 26x32, where the cog was used on the corner joints, unlike the North Adams house. An oversize pin was used to keep it in position. Hewn beech timbers were 7 in. square. At the intermediate tying joints, a single-pin cog was cut. This frame also had through notched joists and a plank raising plate with common rafters nailed to it.

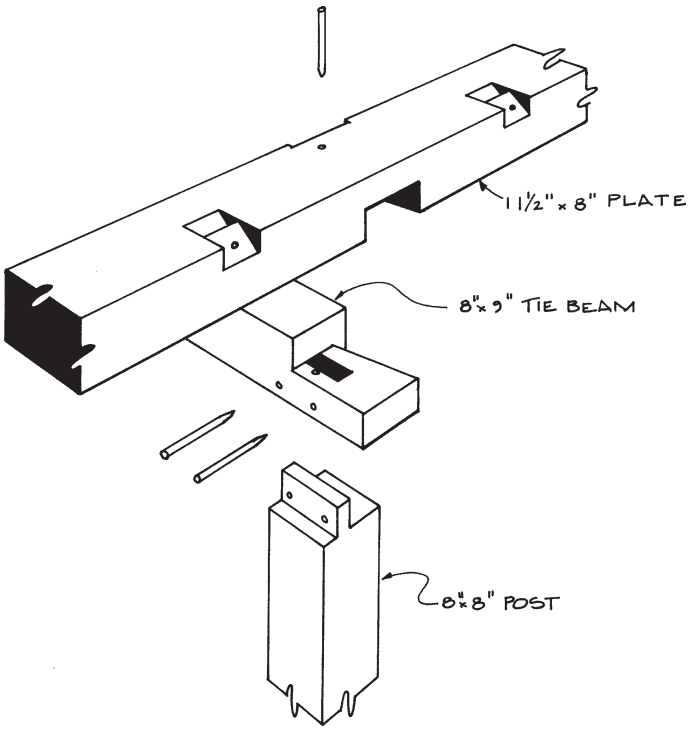

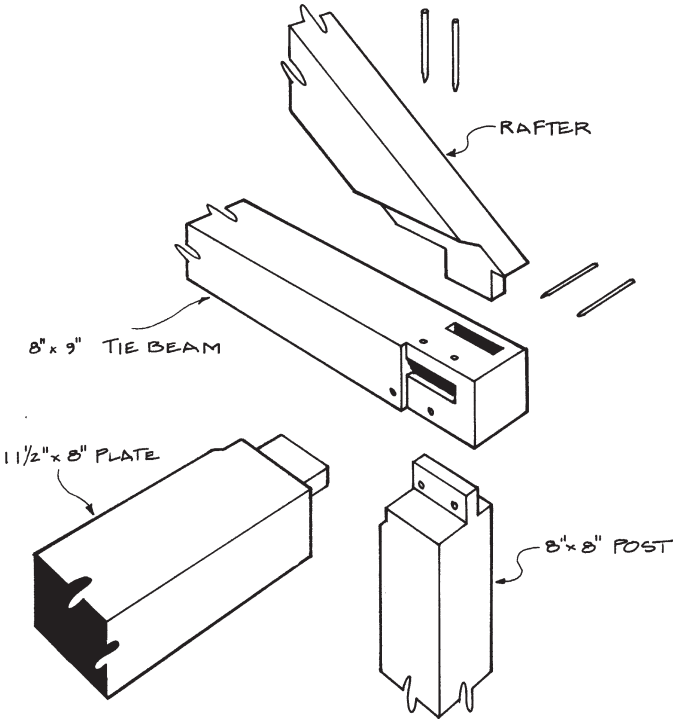

Figs. 18 and 19. The front plate lapped over the dovetailed end of the tie beam in a Charlemont, Massachusetts, house, now dismantled. A single vertical pin also resisted movement. The front plate, together with the tie beam dovetail, projected 6 in. to become a solid cornice base. Rear plate (not shown) did not overhang, and the rear tying joints on the intermediate tie beams relied on through mortises and two pins. The common rafters step-lapped into the plate, except at the front corners, as shown (note hewn rafter tenon).

MORTISE AND TENON. The mortise and tenon joint performs better than a lap dovetail when shrinkage is a factor. Because the pin hole in the tenon is bored a little closer to the shoulder than in the mortise, or *draw-bored*, the pin pulls the joint together very tightly. The joint remains tight under normal shrinkage and loads. At the connection between tie and plate, the mortise and tenon gradually replaced the lap dovetail.

In its most basic form, the tie beam tenons into the side of the plate and is secured by one or more pins. There are countless examples of this joint. Many of these simple joints have not fared well over time, and spreading plates are restrained by cables. If the tie beam occurs over the post, much wood is removed from the plate.

It is prudent to stagger joints whenever possible. There are several ways to accomplish this. First, the plate can project from the face of the building, creating a cornice. Thus the post is tenoned into the tie beam, not the plate (Fig. 22). The drawback here is that diagonal braces can't be framed from the post up to the plate, only down to the floor beams or sill. In some houses framed plank-on-timber, there were no braces. The wide planks, well fastened to sill and plate, braced the walls.

Second, the tie beams can be offset from the posts. But end wall tie beams are outside of the plank wall, and the plates cantilever out to support them. Again, braces can't be framed to them. On intermediate tying joints, a through tenon with two or more pins can be used or, better yet, a wedged through half-dovetail (Fig. 23). Third, the plate can be raised and the tie beam deepened so that the post tenons into the tie beam instead of the plate. This tie-to-plate joint is an improvement over the normal mortise and tenon. Instead of the tie beam pins having two shear planes, they have three (Figs. 25-27*).* These mortise and tenon tying joints require a different raising technique. The plates must be slid horizontally onto their respective tenons, and plate bracing is tricky to insert. A fourth method is to raise the tie beam above the plate (Fig. 24).

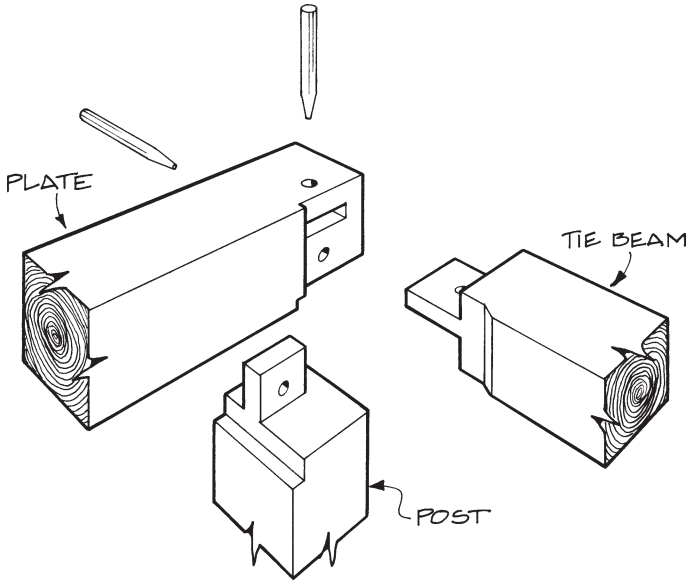

Fig. 21. Simple joint found at the corners of a square rule barn in Huntington, Massachusetts.

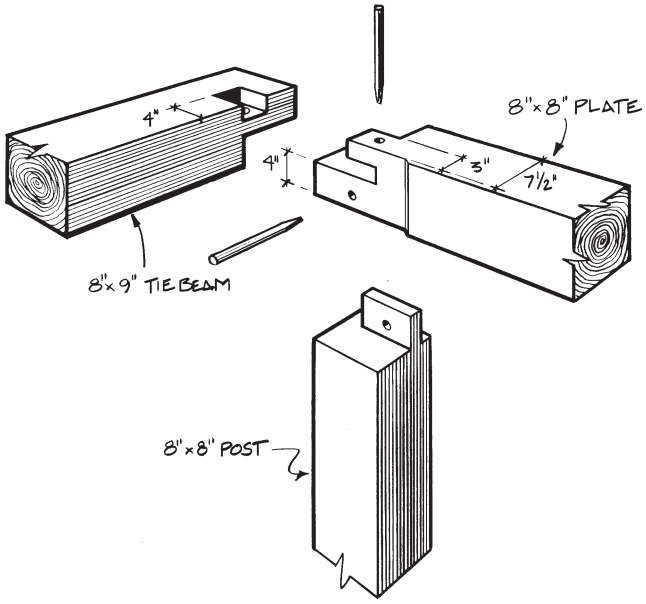

Fig. 20. A cross between a cog and a mortise and tenon, this joint occurs (as far as is known) only at the corners of a 1785 three-bay 30x40 barn in Adams, Massachusetts. Intermediate tying joints are the dropped type. Common rafters with collars are step-lapped into the plate except at the corners where they are butted and nailed.

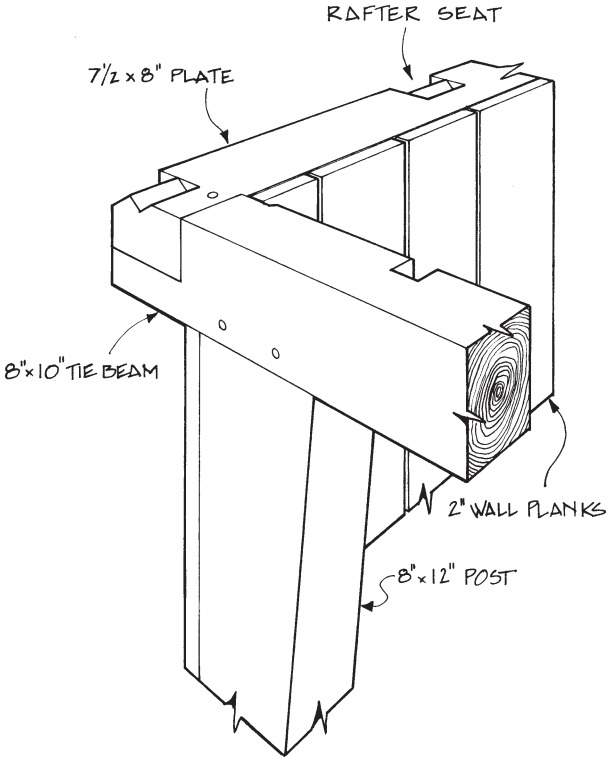

Fig. 22. In this Canaan, Connecticut, example (after 1810), now dismantled, the cantilevered plate projected enough to allow the wall planking to nail to the inside surface. The 6-in.-long tie beam tenons into the plate were secured by one pin at the corners and two pins on intermediate joints. Posts were tapered.

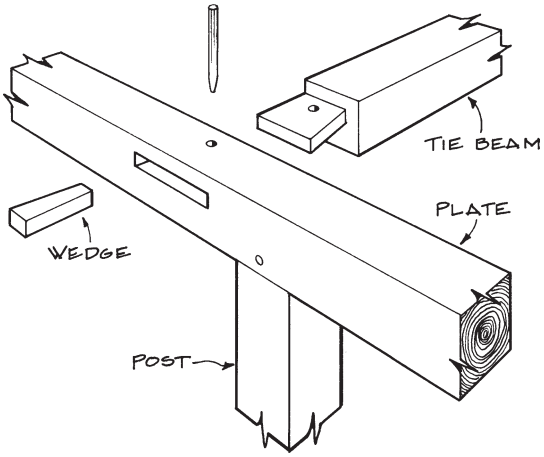

Fig 23. This rugged offset tying joint, a wedged through half-dovetail mortise and tenon, is only used at intermediate locations.

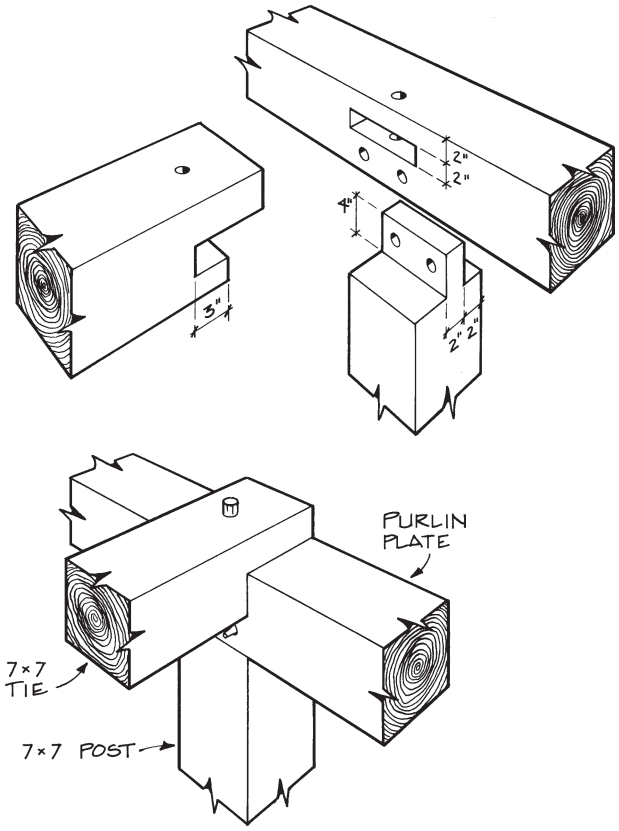

Fig. 24. Tenoned tie connecting purlin plates in a barn in Goshen, Massachusetts, with an additional pin shearing plane in the tying joint.

Fig. 25.

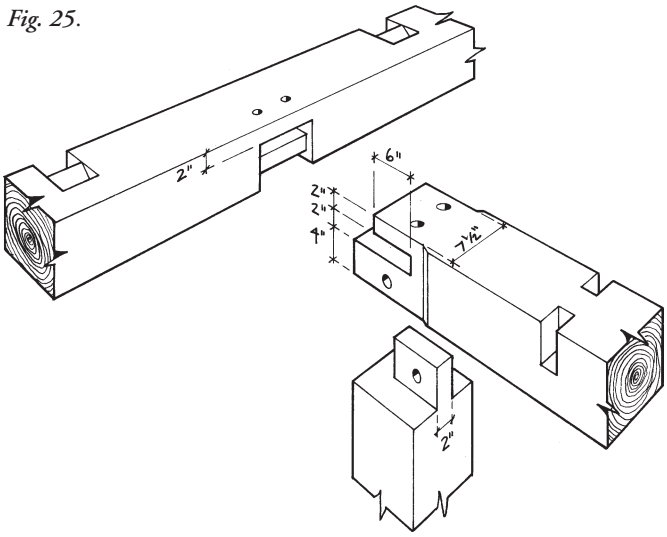

Fig. 26.

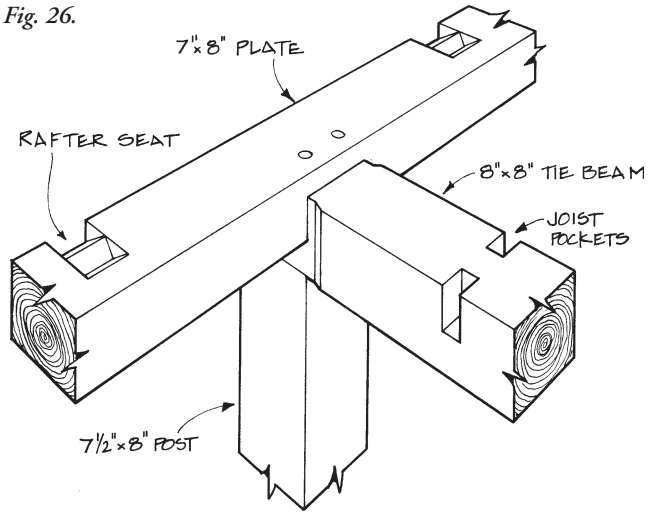

Fig. 27.

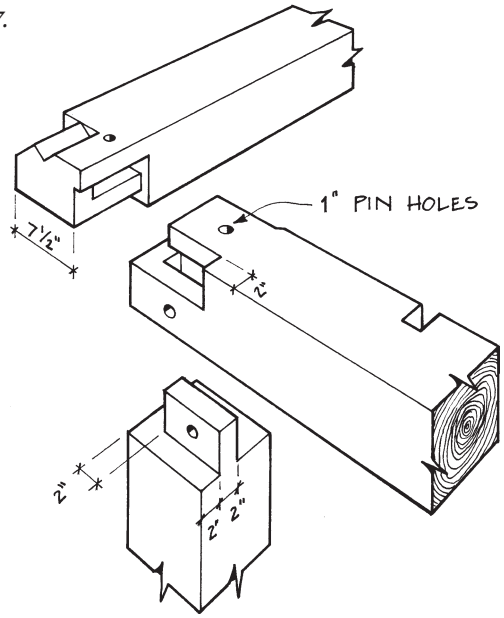

Figs. 25-27. Intermediate (Figs. 25 and 26) and end (Fig. 27) tying joints in a two-story 28x36 post-1810 square rule house in Windsor, Massachusetts. The plate is 2 in. above the tie, allowing the post to tenon into it. The braces from the post up to the plate fit elongated mortises and were apparently inserted after the plate was slid on, and the extra space in the mortise was then filled with a wedge. The end tying joint is similar but with 2 in. of plate relish and only one pin.

TRIPLE BYPASS. This connection is arguably the most perplexing of tying joints located thus far. It is found along the border of New York and New England in four states. Some refer to it as *secret* joinery because it can mystify the casual observer. Its name, coined by Don Carpentier of Eastfield Village in East Nassau (Rensselaer County), New York, is apt. The connection has three mortise and tenon joints, not counting the rafter joint (Figs. 28-30). In Buskirk, New York, a barn with all of its tying joints of this type shows evidence of having been dismantled previously. All the tie beam tenons are inserts (free tenons). Undoubtedly the dismantler was perplexed at how to take the barn apart. He cut the tenons off (a hanging offense in my book) and then spent considerable time putting tenons back on.

How was such a joint assembled? Different bent configurations would call for variations, but all would involve blocking up either the plate or the tie to allow the other to slide on over the post tenon. In a Shaushan, New York, barn, the post tenon into the tie beam is a couple of inches longer than the one into the plate. The tie beam could be blocked up high enough to allow the plate to slide on but still be engaged on its tenon. This particular builder, I would say, had raised more than one of these barns.

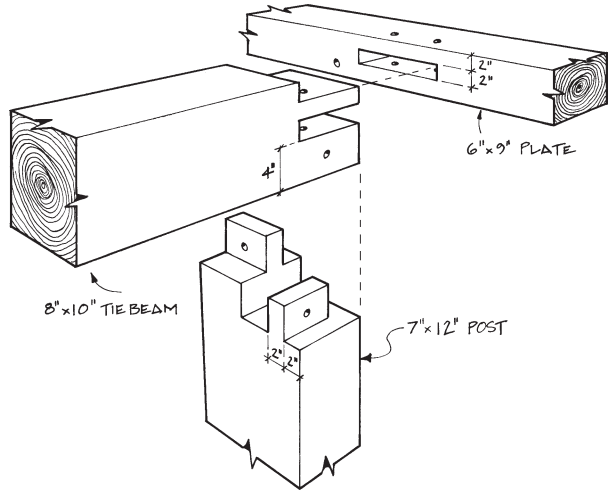

Fig. 30. One of eight triple bypass tying joints in a 26x38 three-bay side-entrance barn in Richmond, Massachusetts, all of this type. End joints are of course provided with plate relish. The tying pins have an extra shear plane. This early scribe rule barn was framed before 1810.

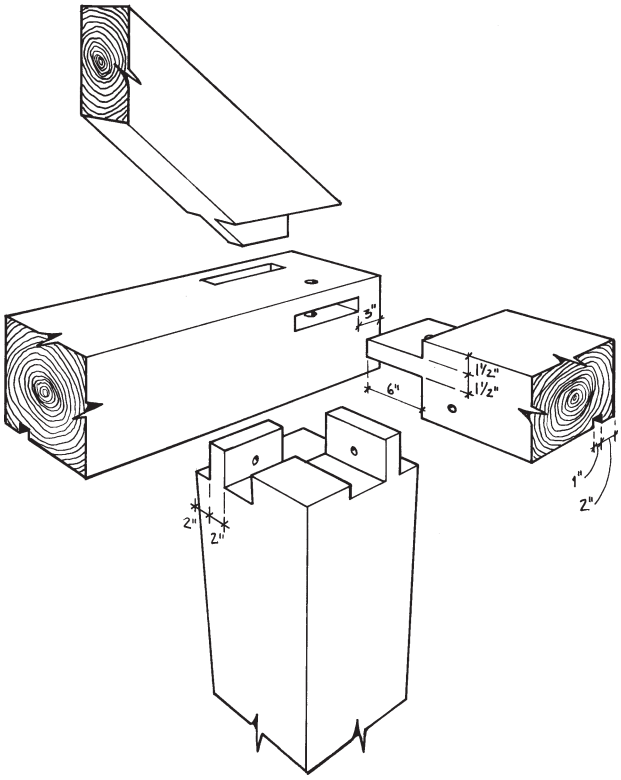

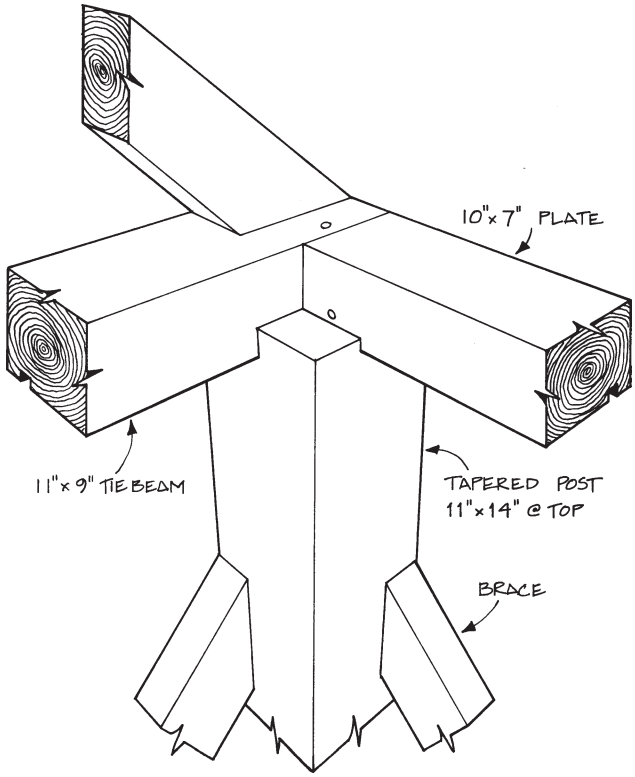

Figs. 28 and 29. This triple bypass corner tying joint was found in an early scribe rule (late 1700s) four-bay, side-entrance barn in Hoosac, New York. The 36x49 barn appeared to be Germanic in origin, with purlin plates and a ridge beam. Intermediate ties were the dropped type. Long braces extended German-fashion from the sill up to the corner posts. These undoubtedly helped stabilize the structure during the setting of the plates. Boarding grooves were worked in both plate and tie. This barn was carefully dismantled but unfortunately burned while in storage.

INTERRUPTED PLATE. In the mid-19th century, a new barn type emerged in New England, a gable-entry, aisled barn that could vary in length from two to 10 bays (or more). Bays were typically 12 ft. Such barns were often built into side hills to allow access on more than one level. Figuring prominently in their design was a frame with interrupted plates. These shorter plates, tenoned between tie beams or posts, allowed standardized joints and components. A builder could vary the size without changing the design. Bents were raised and connected by plates and braces. As soon as two bents were connected, the frame was braced and stable. There were variations in this joint depending on cornice design. Some barns had two plates. One was in the normal position to receive the tops of the wall boards. The second tenoned between the projecting tie beam ends to support the fascia and soffit.

The interrupted plate was not an improvement over the continuous plate. Wind loads cause the plate braces to exert tension on the short plate tenons, typically 3 to 4 in. long, which can handle only small tension loads. But roof boarding, flooring and cornice work often provided enough continuity to make up for what the continuous plate had provided, and some barns had continuous purlin plates with a scarf where necessary. Some houses as well were built with interrupted plates, but by this period balloon framing was becoming popular for houses, and timber framing was in decline.

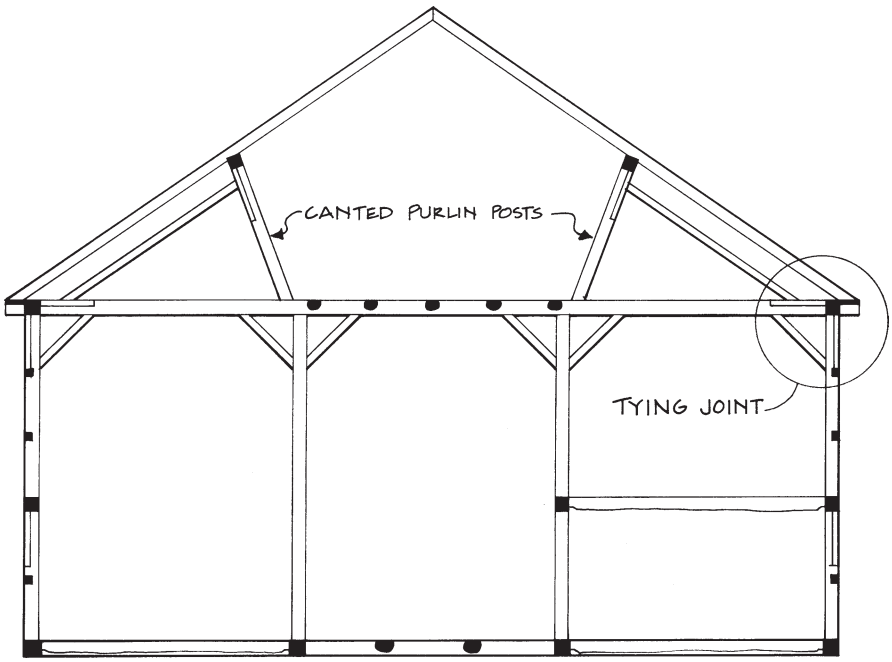

Figs. 34 and 35. Sectional drawing of a ca.-1850 barn, now rebuilt elsewhere, that once stood in Shrewsbury, Massachusetts. Measuring 37x50, it has canted purlin posts, continuous purlins and interrupted plates. All principal timbers are 7x7. To support a substantial Greek Revival cornice, the builder has inserted outriggers into the plates and secured them with nails (Fig. 35 below). A 2x11 raising plate is nailed to the outriggers, and the projecting tie beam ends stiffen the assembly and support the rafters. Braces in three planes reinforce the structure.

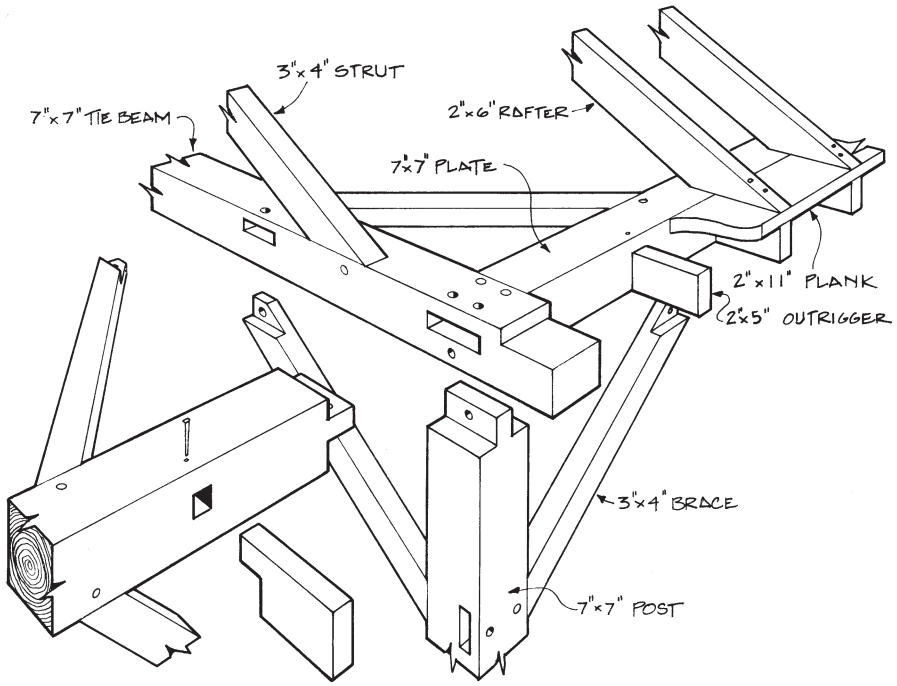

English tying joint tradition lives on after a fashion, with dropped, interrupted plates, in this Newfields, Maine, aisled barn. The plates tenon into the sides of the post; a flying plate (not visible) is supported by the tie beam ends.

At right, interior view of the Howland House, a 17th-century dwelling in Plymouth, Massachusetts, showing the awkward bit of roof visible above the plate in the normal configuration of the English tying joint (see Figs. 2 and 3). Here the summer beam bears on the plate; it was more common in such houses for the summer to span between the ties, and thus for common joists to bear on the plates.

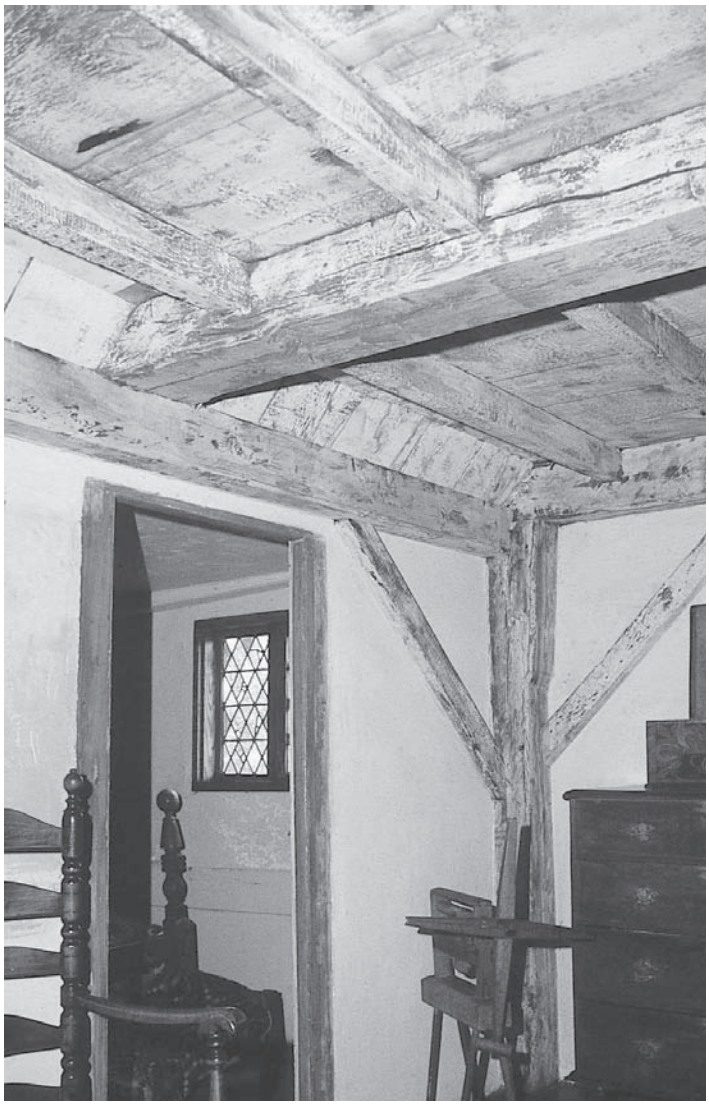

Below, another typical (if not very well cut) English tying joint, from a 1750s blacksmith shop in Sherborn, Massachusetts. See Figs. 2 and 3 of this chapter.

Above, flush tying joints, with top of tie beam and top of plate coplanar, yield neat box frames, as seen in this partly dismantled 1791 house in Cheshire, Massachusetts (see Figs. 11 and 12 of this chapter). Below, mid-18th-century aisled barn in Kensington, New Hampshire, with English tying joint and rare extended tie beams that cross the main, continuous plate and carry the members of an interrupted flying plate tenoned between them. The flying plate, seen to the right of the peg, supports a Greek Revival cornice.

Sixty-ft. 14x17 hemlock sill girder from a barn in Middleburg, N.Y., rabbeted and undercut on both sides for 3-in. threshing-floor planks. Girder was blind-tenoned to gable sill and secured by three pins.

III. Sill and Floor Joints

JUST as the plates and tie beams hold together the upper part of the timber frame, the sills tie the posts at the foundation level. Though not subjected to the same stresses as tie beams above, sills keep the bottom of the building from spreading. Many old structures whose sills are decayed are noticeably wider at the bottom. Sills distribute column loads over the foundation and act as bond beams to hold together the top of the stonework. They also stiffen and support the walls and the first floor. Sill timbers are typically rectangular in cross-section and laid flat.

SILL CORNER JOINTS. The most critical joint, often least documented, is at the corner where the longitudinal (or long wall) sill, the end wall (or gable) sill and the corner post join. In many old structures this joint is badly decayed or the sills have been replaced and a simple half-lap joint substituted.

Blind mortise and tenon. Far and away, the most frequent sill corner joint is the blind mortise and tenon (Fig. 1). It combines simplicity with effectiveness. Mortises for both the post and the adjoining sill have relish to prevent horizontal displacement. The relish is usually equal to the tenon thickness, that is, 1½ or 2 in. This design offers a modest amount of weather protection. Even though most American frames are covered by siding, wind-driven rain can penetrate. This joint has its origins in Europe where timber frames are often exposed to the elements. Usually one pin secures the two sills while the post bottom has a stub tenon. If the post has a longer tenon of, say, 3 in. (still without a pin), the sill mortise and tenon will be framed lower to avoid a conflict.

Through Mortise and Tenon. Much less common is this through mortise and tenon variety (Fig. 2). It occurs typically where sills are square in cross-section, or rectangular and set on edge, as the through joint increases tensile capacity for a narrow sill. Unfortunately, weather resistance is diminished compared with the blind joint, and the mortises are more likely to split open and the relish to fail.

Sloped Tabled Corner Lap. Only one example of this joint has so far been found (Fig. 3, facing page), in a barn in St. Johnsville, New York. It appears to be of Germanic design. The dovetail-like lap prevents lateral displacement, but, unlike the mortise and tenon type, it must be sandwiched between the post and foundation to be effective. Otherwise, twisting from seasoning or subsiding of the foundation can render it ineffective.

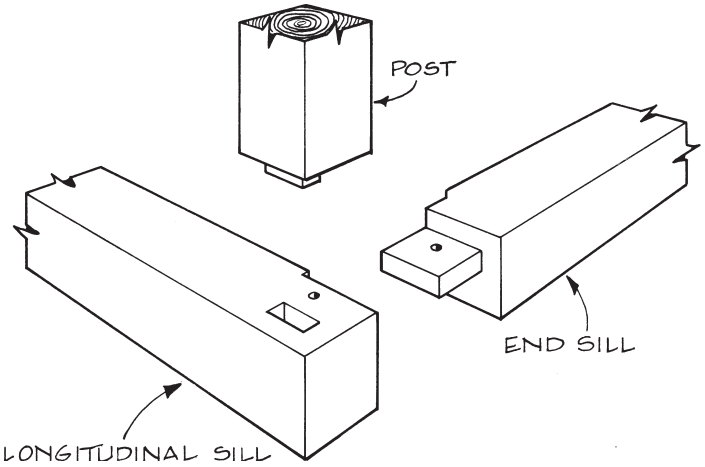

Figs. 1 and 2. Blind (above) and through (below) mortise and tenon joints, both sized according to square rule layout.

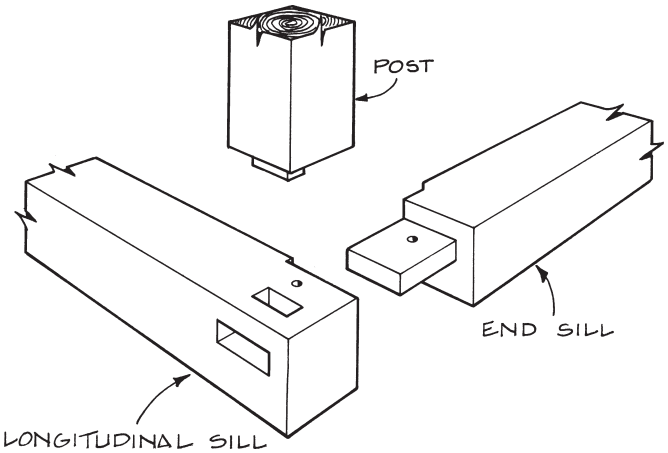

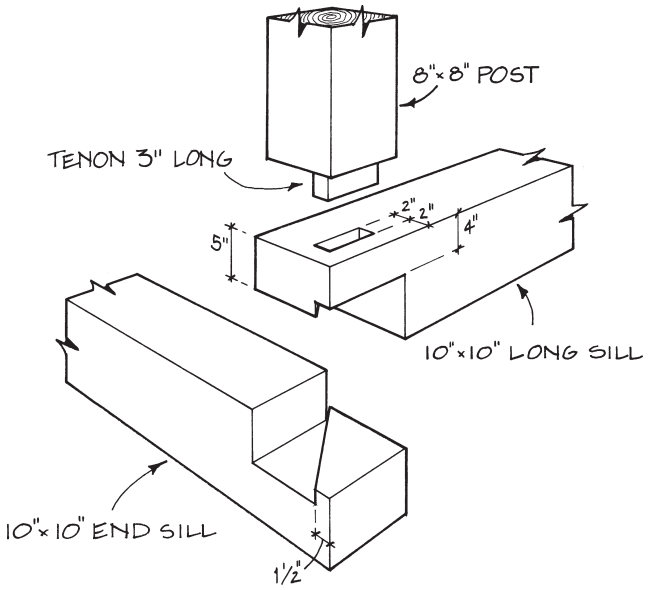

Fig. 3. Unique sloped and tabled corner lap, St. Johnsville, N.Y.

INTERMEDIATE SILL GIRDER JOINTS. These are connections where interior sill girders meet either longitudinal or end wall sills. They often have posts bearing on them.

Blind Mortise and Tenon. Again this joint is the most common type (Fig. 4). Because there is no question of relish as at the corner, the tenons can be wider and typically are secured with two pins. This joint is moderately weather-resistant.

Inverted Lapped Full Dovetail. Rarely, the bottom of the end wall sill receives the lap dovetail (Fig.5). It is secured by being sandwiched between the foundation and the sill.

Lapped Half-Dovetail. This simple joint (Fig. 6) is somewhat common in Dutch barns where the interior longitudinal sills for the posts join the end wall sills. The purlin posts are tenoned into the lap dovetail.

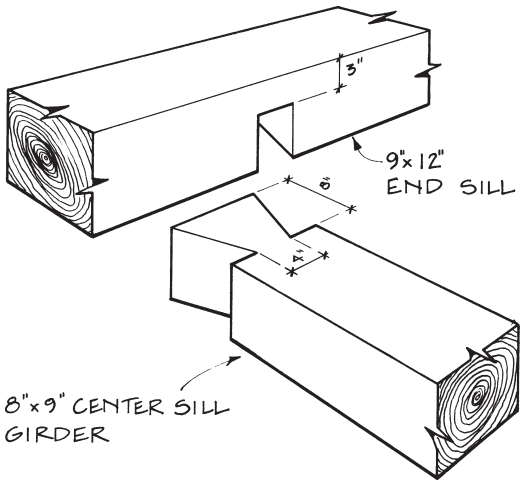

Fig. 5. Inverted lapped dovetail in Dutch barn moved from Guilderland, N.Y., to North Tarrytown. The 47-ft. girder supports a 3-in. plank threshing floor and is well protected from weather. Assembled, the underside of the girder lies 2 in. below the underside of the sill.

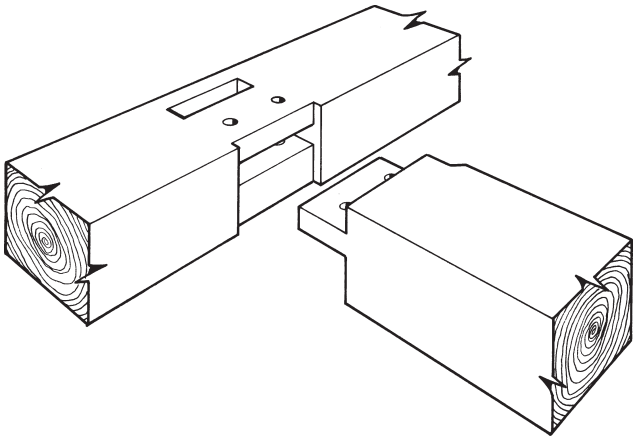

Fig. 4. Blind tenoned girder joint.

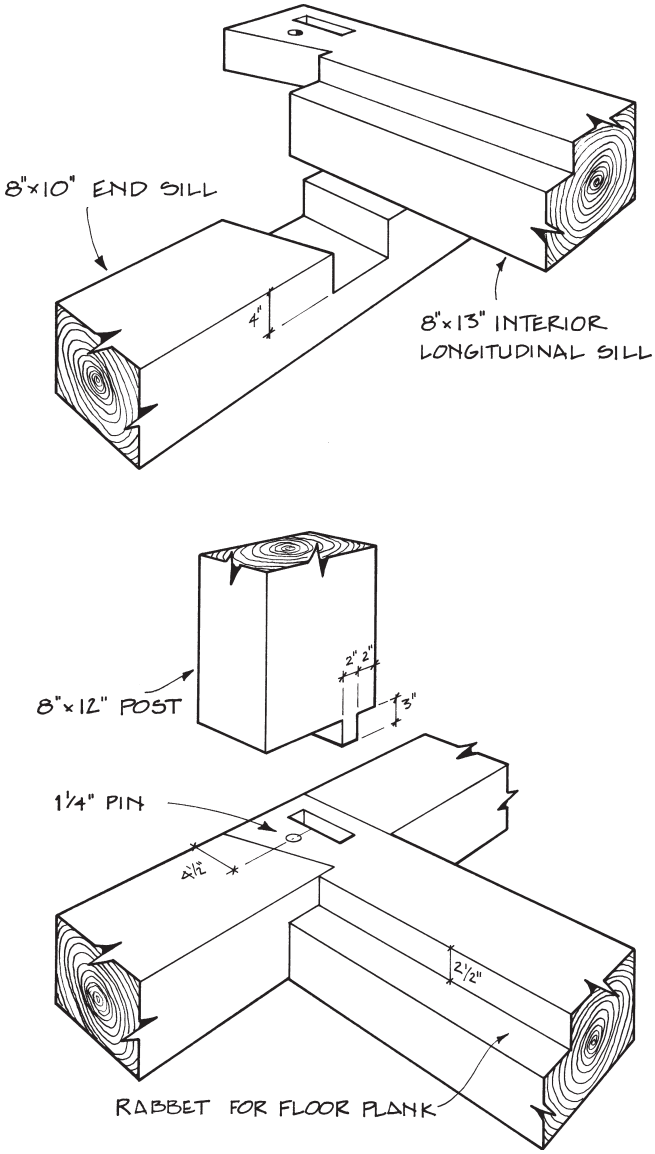

Fig. 6. Views of lapped half-dovetail girder joint in a pre-1820 scribe rule Dutch barn moved from Fort Plain, N.Y., to Altamont. The interior sill is rabbeted for the 2½-in. splined plank threshing floor.

Plank Sill. This unusual sill system has been seen on at least two scribe-rule-framed 18th-century New York Dutch houses, one standing in Stuyvesant (Fig. 7) and the other (now dismantled) formerly in Cohoes. Both houses, built with unfired brick infill between the posts, measure about 18 ft. wide, with full-span floor joists. Because of their long span and wide spacing (4-5 ft.), the joists are 12 in. deep. But a corresponding 12-in. sill is both impractical and unnecessary. With the plank sill system, the joists are set into the stone or brick foundation and a 1½x6 plank is notched in flush to their tops and nailed to secure them. The plank is through-mortised for the posts, and the mortise extends an inch into the joist as well. This design saved on material and joinery, and was probably also a time-saver during the scribe layout process. It has proved itself over time.

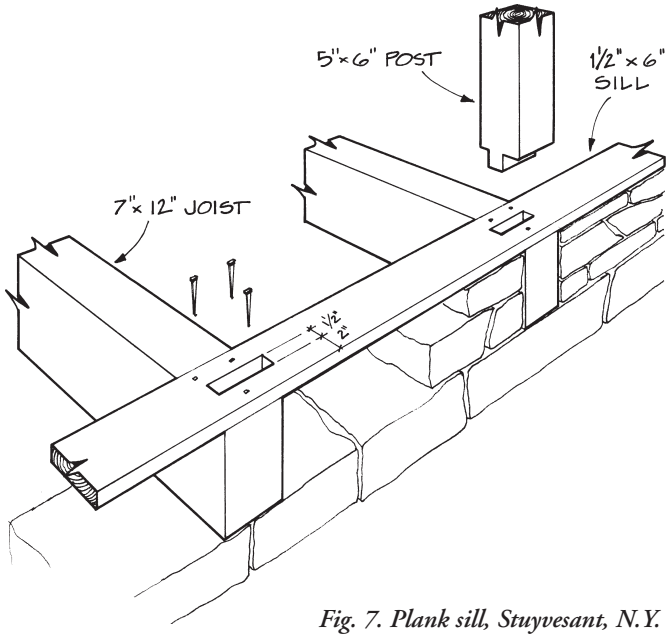

Fig. 7. Plank sill, Stuyvesant, N.Y.

FLOOR JOISTS AND GIRDER JOINTS. In the days when most timber was hewn, considerable time could be saved by hewing some members only on faces that had to be flat to receive sheathing. Thus floor joists, especially ground floor and barn joists, were often hewn only on top. At the joint, they were shaped to a rectangular cog (Fig. 8).

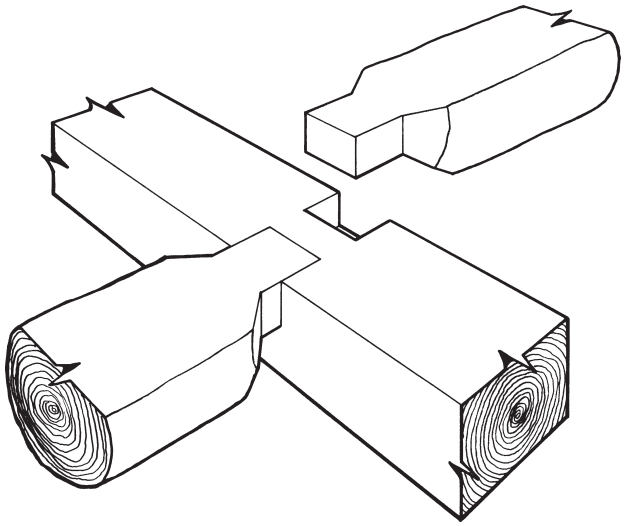

Fig. 8. Flattened log joists.

Butt Cog Joint. The simplest joint to craft and insert, and consequently the most common, is the simple drop-in pocket or butt cog (Fig. 9). The full depth of the joist may be notched into the girder, or, more commonly, the joist is reduced in depth at the joint so as not to cut too much out of the girder. When the joist end is reduced in this way, the stiffness or bending strength of the joist is not affected, but its shear strength is diminished at the joint.

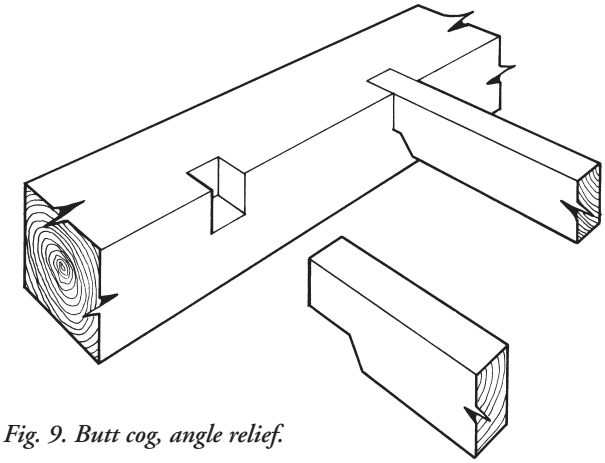

Fig. 9. Butt cog, angle relief.

To avoid concentrating the shear stress at the notch, builders removed additional wood with an axe or adze, on an angle as shown. In a few frames, the joists were reduced in a graceful curve using the adze (Fig. 10).

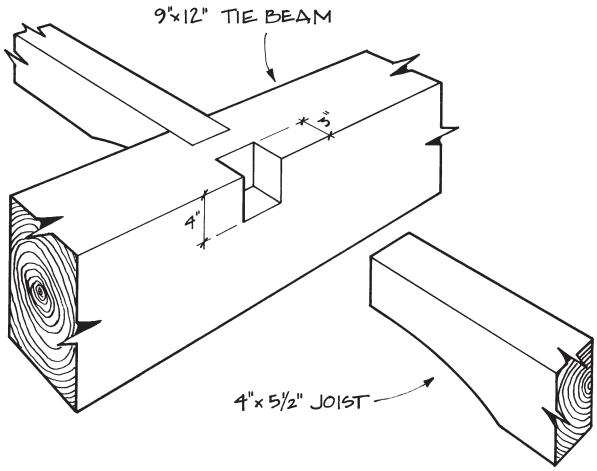

Fig. 10. Butt cog, curved relief.

If the bottoms of joists were to receive lath and plaster, then it was more convenient to use a squared notch at the girder. If the girder was also to be covered with lath and plaster, then the joist was typically notched to half its depth (Fig. 11). The square notch is considerably weaker than the angled or curved type, and many old frames exhibit cracks or breaks at the notches.

The popularity of the drop-in joist pocket was in large part due to its convenience during assembly. Drop-in joists are easily inserted from above after the girders or tie beams are in place.

In square rule structures, an additional gain was often cut in the girder below the notch, to size the girder to a consistent width so that all the joists could be cut to one length. The gain was usually a half-inch or less in depth so as not to unduly weaken the girder.

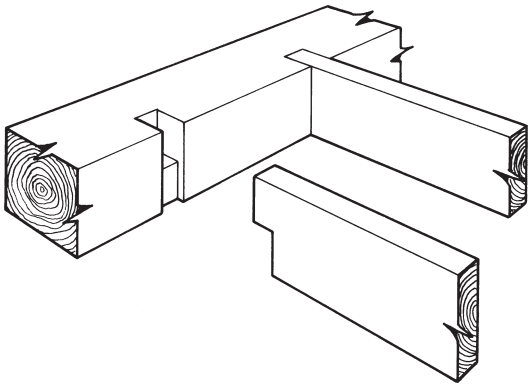

Fig. 11. Narrow full-depth joists with lower sizing.

TYING JOISTS. Floor frames other than in the smallest buildings required one or two joists in each bay as tying joists to keep the girders or tie beams from spreading. Were they to spread, the cogged joists could withdraw and allow the floor to collapse. The most common tying joint was a half-dovetail (Fig. 12).

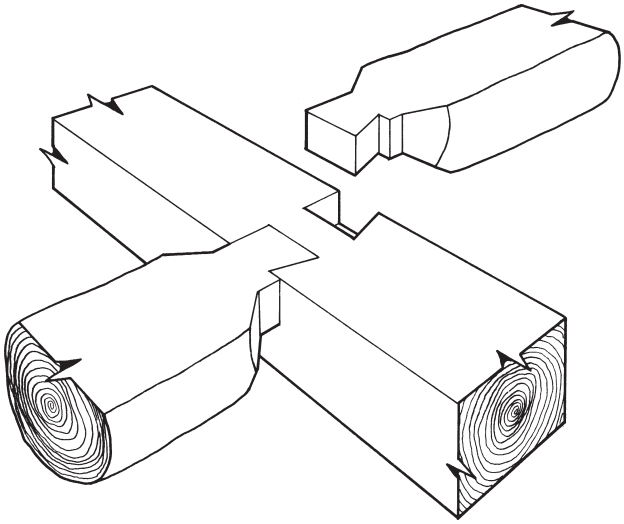

Fig. 12. Half-dovetail butt-cogged flattened log joists.

A variation was to bore a pin hole at the edge of a joist tenon after the joist was in place and drive a squarish pin that both wedged the joist tight against the opposite side and acted as a cog to prevent withdrawal (Fig. 13). On larger framing, the technique could be used on both sides. In framing where the top surface of the joist was elevated above the girder, a lap dovetail could be used (Fig. 14). If the joists were permitted to extend past the girt, the through lap (Fig. 15) was effective. Both of these joints can be found in the side-aisle lofts of Dutch barns.

Figs. 13-15. At top right (Fig. 13), butt-cogged tying floor joists with cogged pin, Cheshire, Mass., 1791. At middle right (Fig. 14), lapped half-dovetail on side-aisle loft joist in a 1680s Dutch barn moved from Saratoga, N.Y., to Hancock, Mass., and since lost to fire. The opposite ends of these joists were vertically tenoned to wall posts. At bottom right (Fig. 15), through laps in side-aisle loft joists of a Dutch barn in Westerlo, N.Y. (also lost to fire). The through lap, simple as it may be, is quite effective as a tying joint.

Fig. 13.

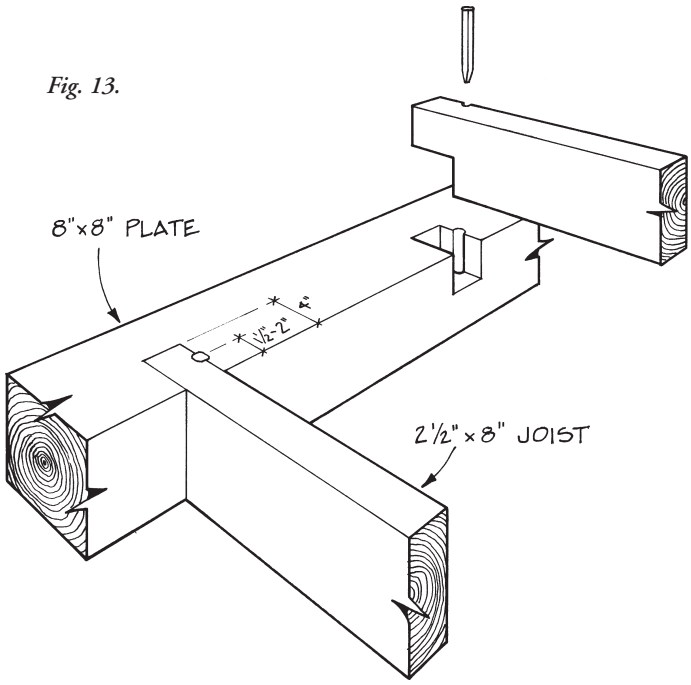

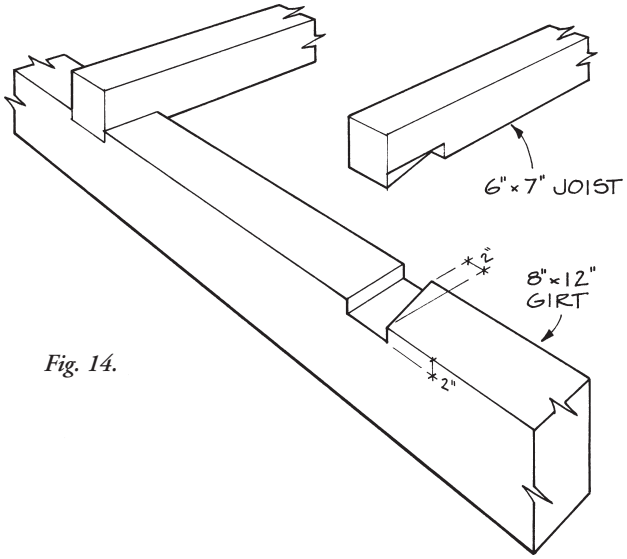

Fig. 14.

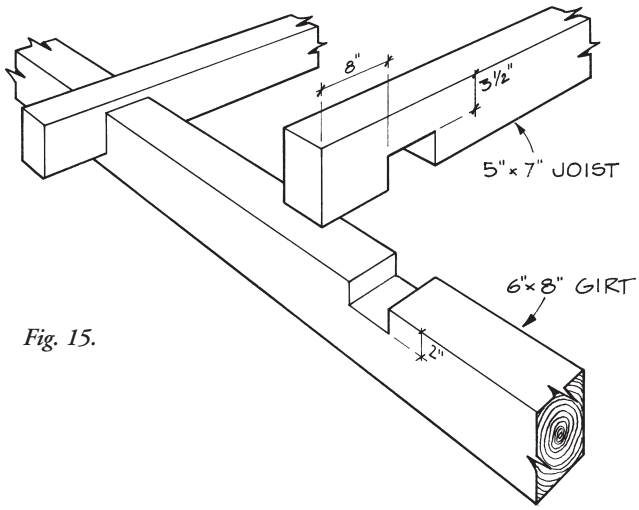

Fig. 15.

Strengthened Halving. This variation of the half-lap joint (Fig. 16) is configured to increase capacity for both members by adding bearing surfaces. The lower supporting beam has less material removed compared to a half-lap. The side housings provide better support for the upper girder and lessen shear problems. Examples are found in the attic floor of houses where a central spine beam runs the length of the house, lapping over the tie beams and carrying joists from both sides.

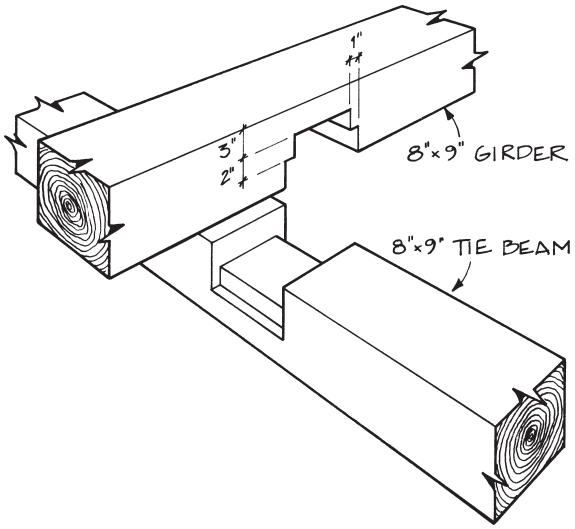

Fig. 16. Strengthened halving found in the attic floor of the 1783 Quaker Meetinghouse, Adams, Massachusetts. The 8x9 girder ran longitudinally and carried floor joists on both sides.

TENONED JOISTS. The mortise and tenon joint's structural advantage for connecting floor joists to a carrying timber is that in cutting the mortise, little or no wood is removed from the top or bottom surfaces of the carrying beam. Since these surfaces are under the greatest stress (compression in the top and tension in the bottom), a beam mortised in its side retains nearly all of its original strength. By contrast, a beam with a butt cog joint cut into each top edge loses 15 to 40 percent of its original strength. Another advantage is that by adding a pin, a tenoned joist becomes a tying joist. (However, a pin hole bored right through a beam reduces its strength. A tight-fitting pin may effectively replace the missing compression wood on top, but the pin cannot replace the tension wood on the bottom.) There is also a disadvantage to tenoned joists: they must be inserted from the side rather than the top. Thus joists are inserted in sets as each bent reaches vertical, or in the case of tie-at-plate examples, as each tie beam is set. Assembly requires careful work with many hands or temporary support structures. Alternately, joists may be tenoned at one end and merely seated on top of a beam at the other as in several 17th-century Massachusetts Bay houses. The simplest form of tenoned joist has the tenon bearing all the load (Fig. 17). The joint is simple to cut and removes a minimum of wood from the summer beam. It is common where closely spaced joists support a plaster ceiling and the joists and summer beam are the same depth. But the tenon is weak in shear.

Housed mortise and tenon. A vast improvement in structural performance results from housing the entire joist end into the beam (Fig. 18). The shear problem is eliminated. However, the beam must be sufficiently deeper than the joist. This joint is more often seen on large joists spaced far apart and on headers. Fig. 19 shows a variation housed only below the tenon. This retains slightly more compression wood on the top of the beam while not reducing the shear capacity of the joist.

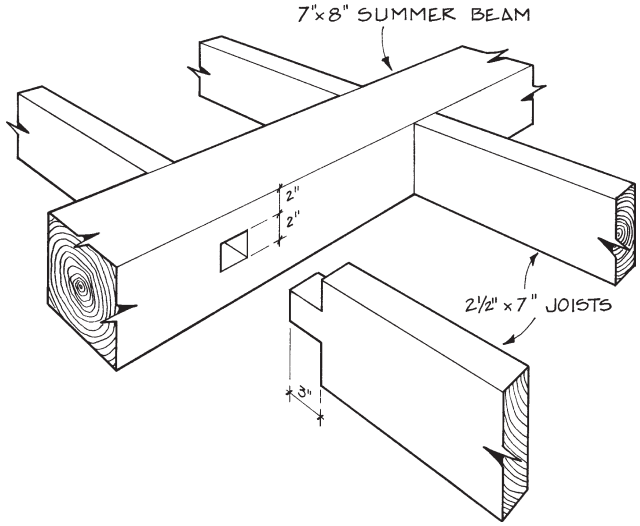

Fig. 17. Simple tenoned joists supported the second floor of a 1791 Cape-style house in Cheshire, Massachusetts.

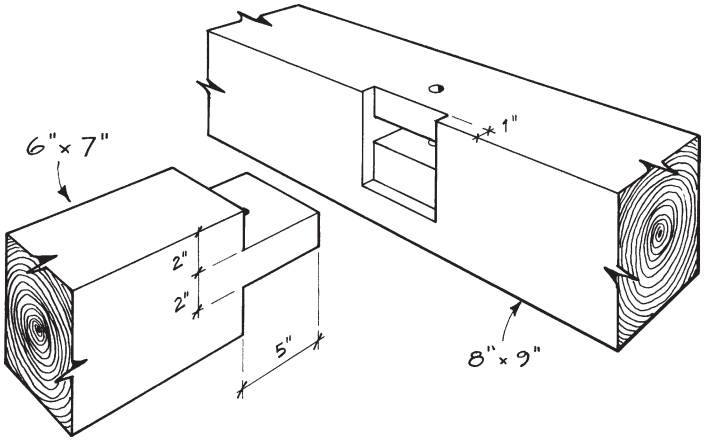

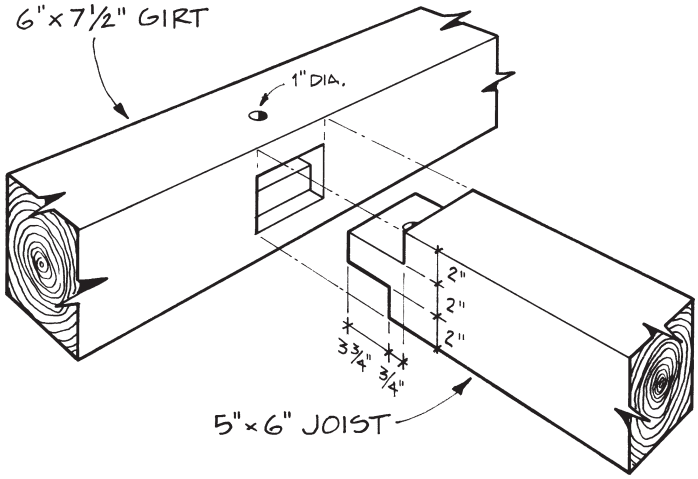

Fig. 19. Aisle loft joist in a Dutch barn, Warnerville, N.Y.

Strengthened Tenons. The ultimate tenoned joist has a sloped shoulder above the tenon (Fig. 20) that brings into bearing the entire depth of the joist while keeping intact the vital compression wood of the carrying beam. In 18th- and 19th-century builder's books it is the floor joint of choice. In ideal form, the underside of the tenon is continuous with the joist (and thus properly termed a soffit tenon, Fig. 20) and the mortise in the carrying timber is centered in the side of the beam.

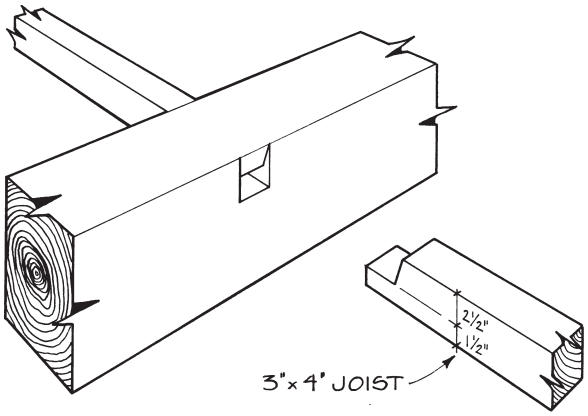

Fig. 20. Typical strengthened tenon, here without pin.

Historically, some authorities (e.g., Joseph Moxon in *Mechanick Exercises*, 1703) called the upper sloping shoulder a tusk; others (James Newlands, *The Carpenter's Assistant*, ca. 1854) reserved that term for an additional bearing shoulder cut beneath the tenon when the joists are too deep for soffit tenoning. In our day, Cecil Hewett (*English Historic Carpentry*, 1980) referred to the upper sloped shoulder as a diminished haunch and the lower square one as a housed soffit shoulder.

Occasionally the lower shoulder too was angled (Figs. 21 and 22) to form what Hewett called a spurred shoulder.

Other tenon forms. Any joist tenon can become a through mortise and tenon with wedges to increase tensile capacity (Fig. 23). Especially deep members could have paired tenons (Fig. 24, overleaf).

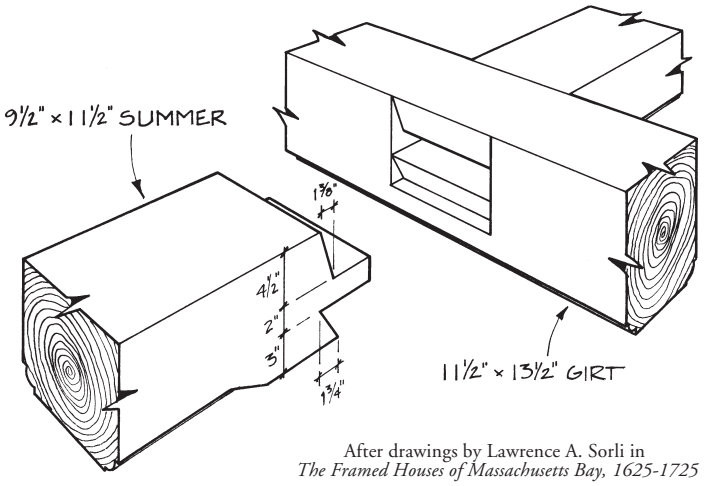

Fig. 21. Summer beam to girt connection in the 1665 Gedney House, Salem, Massachusetts. Both members have molded chamfers.

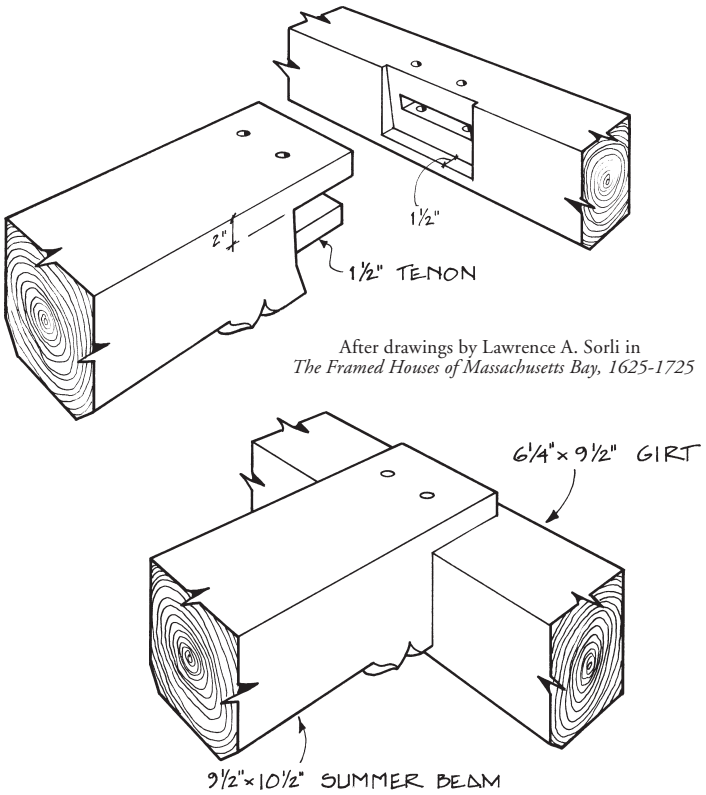

Fig. 22. Equal-depth summer beam and girt in the 1637 Fairbanks House, Dedham, Massachusetts. The summer is raised and lapped 2 in. over the girt to gain needed support at the bottom of the joint. Lack of congruency between housing and tenon shoulders is unexplained.

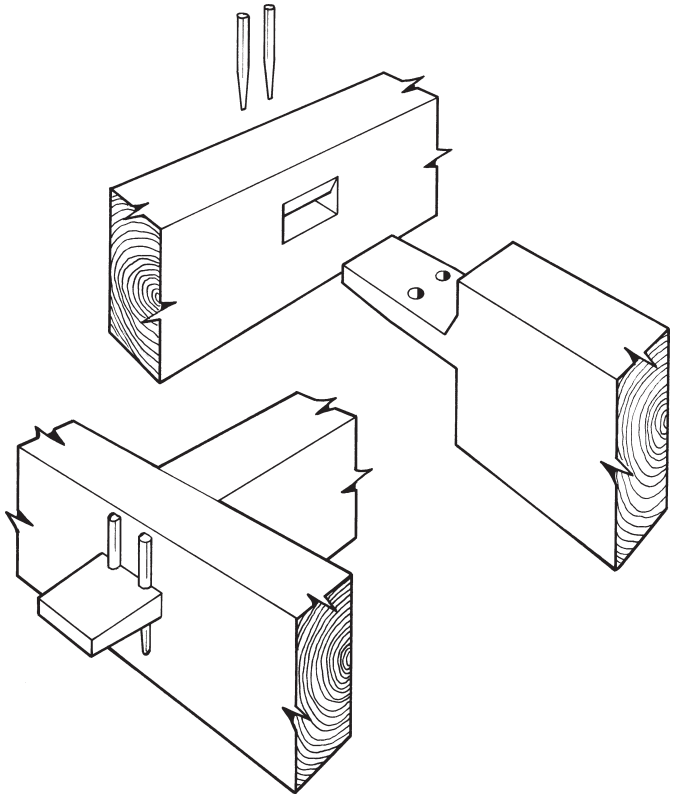

Fig. 23. Through tenon with outside wedges (pins flattened on a taper) in the attic floor of the Presbytère (1847), New Orleans.

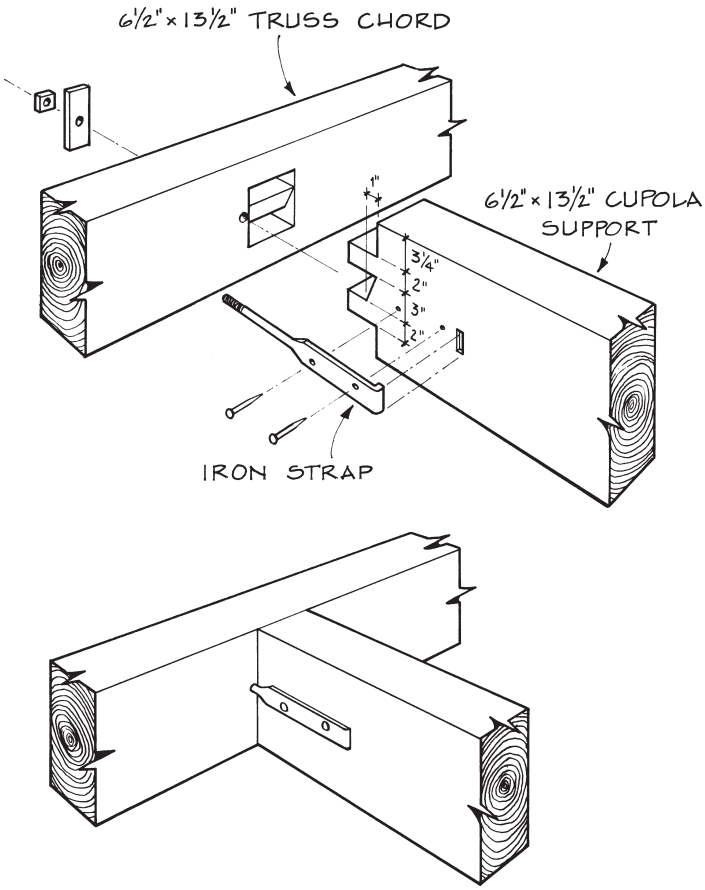

Fig. 24. Paired tenons, one strengthened, carry the ends of beams supporting cupola posts in the roof frame of the Cabildo, the original Spanish city hall in New Orleans (1796, 1849, 1992). A forged iron strap prevents spreading.

SPECIAL MORTISES FOR CEILING JOISTS. In larger structures with trussed roofs, such as meetinghouses, it was necessary to provide ceiling joists between the tie beams of the trusses. Builders preferred to keep the ceiling joists flush with the bottom of the tie beams so that an uninterrupted plaster ceiling could result. Tie beams are typically deep in section (10-12 in.), while ceiling joists might only be 4 in. deep. Inserting 20 or more tenoned joists between tie beams as the latter are placed would be daunting. Builders used at least four different methods to insert tenoned joists between the tie beams after the trusses were in place.

The L-Mortise. This mortise allows the tenon to be lifted up and over (Fig. 25). Only one end of the joist has to be accommodated thus since the tenon on the other end of the joist can be inserted first (at a small angle to the horizontal) into a standard mortise. Though the L-mortises are shallow, they still cut into the bottom surface of the beam. Typically, only one side of each tie beam has these mortises.

The Short Joist. A joist with a shorter shoulder to shoulder length than the spacing between the tie beams can be inserted into one mortise an extra 2 or 3 in. deep, then swung into place and slid back until it bears an equal amount at each end (Fig. 26). Of course, the joist needs to be secured from future movement. Its main disadvantage is potential shearing of the tenon.

The Vertical Chase Mortise. One end is again inserted first, and the other swung down from above in a chase mortise (Fig. 27). Inserting joists from above is perhaps more convenient, but these mortises substantially reduce the section of the tie beam. The depth of these mortises must be kept to a minimum.

The Horizontal Chase Mortise. In this variation, also called a pulley mortise, a continuous slot connects two or three joist mortises (Fig. 28). Thus multiple joists are maneuvered into place in the same slot.

With all these post-raising insertion types, the spacing of the tie beams, which are long and somewhat flexible, would be secured by at least one tying member near midspan to prevent spreading of the beams and collapse of the ceiling. The lath would secure the spacing of the joists. Since the horizontal chase mortise does not remove wood from the bottom surface of the tie beam, it is the best solution structurally. However, it is more time consuming to craft than the first three.

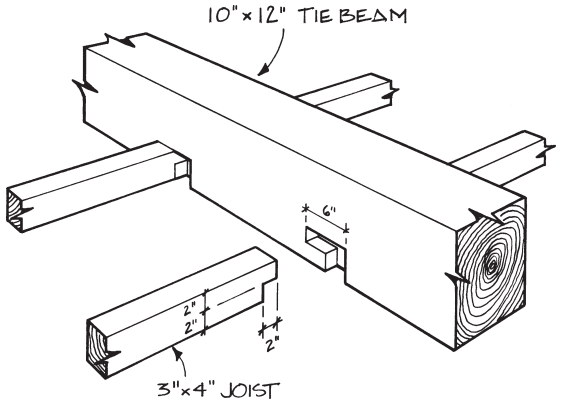

Fig. 25. L-mortises in the 1829 Newbury, Vermont, Methodist Church. Building measures 45x60 with the ceiling joists spanning about 12 ft. and spaced 30 in. on center.

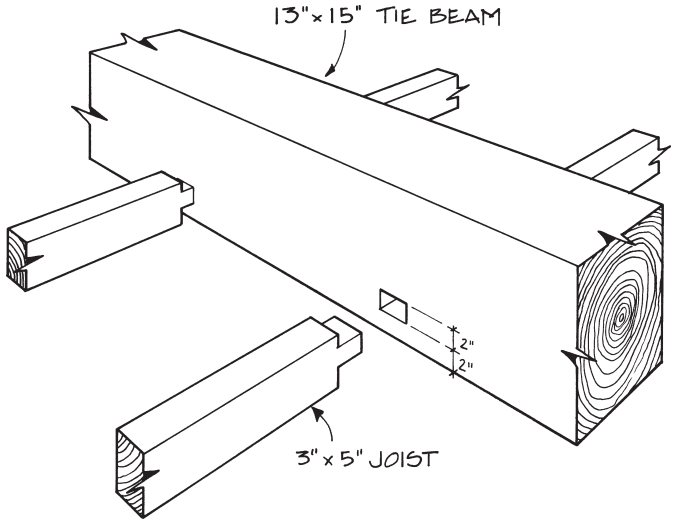

Fig. 26. Beech ceiling joists with shortened shoulders are secured from movement by a single cut nail in the Second Congregational Church, Newport, New Hampshire (1823).

Fig. 27 (right). Board ceiling joists tenoned at one end and notched at the other drop into vertical chase mortises on the tie beams of the 1815 Methodist Church at Chenango Forks, N.Y. (now dismantled and reassembled in Burbank, Ohio). The bearing for the joist in the tie beam is only an inch deep. Close truss spacing of about 8 ft. permits the use of light boards. Similar joinery is found on an 1840 church in Brimfield, Massachusetts.

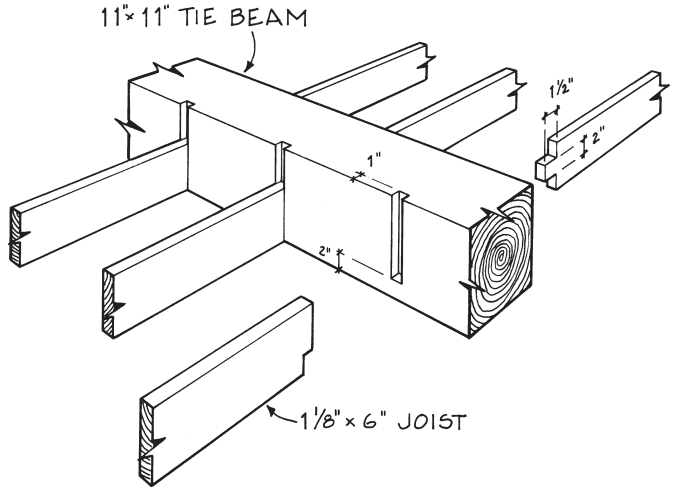

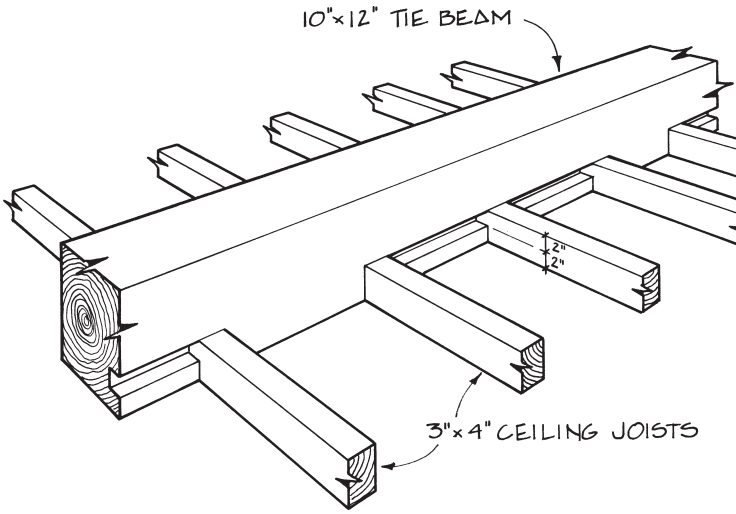

Fig. 28 (left). Long pulley (chase) mortises were cut in the tie beams for every three ceiling joists in the Hatfield (Massachusetts) Meeting-house (1750). The opposite side of the ties had simple 2x3 mortises. This building was destroyed while being rolled to a new site in 1979.

The typical blind sill corner joints on this house frame in Charlemont, Massachusetts, give little clue to their inner mortise and tenon configuration. The first joist to the rear, hewn flat only where necessary, joins the sill in a butt cog. Timber sills and girders, historically a natural part of the timber frame, have virtually disappeared from modern American work.

Sheathing direction determines the orientation of wall framing. This early-1800s barn (now dismantled) from Middleburg, N.Y., has studs to support wide clapboards. Note how braces take precedence over the studs.

Scribe rule barn in Chatham, N.Y., with packing or distance piece driven to take up space neeeded to fit brace into made-up assembly of post and beam. Brace, post and packing piece are all marked for reassembly after scribing.

IV. Wall and Brace Joints

WALL JOINERY: HORIZONTAL SHEATHING. When a timber-framed building was sheathed horizontally, typically with clapboards, the supporting framework provided vertical nailers called studs, spaced according to the type of sheathing applied. We may find studs centered as closely as 16 in. for ½-in. clapboards or as far apart as 5 ft. on Dutch barns, where the clapboards might be 1x14 lapped boards.

The barefaced mortise and tenon joint typically secures studs to sill, girt, tie beam and plate. Since a barefaced tenon has only a single shoulder, it is very quick to cut. In a scribe rule building, these studs are not usually housed into the mortised piece. In a square rule building, they are typically housed at one or both ends (Fig. 1). If pinned, tenons are typically twice as long as they are thick (for example, a 1½-in. tenon would be 3 in. long). Unpinned joints are common, as are stub tenons. Stub tenons are the same length as their thickness. Square rule buildings typically have stub tenons at the bottom of studs and pinned tenons at the top, to keep the studs from falling out during the rearing of assemblies but to allow easy insertion of the many studs into the sill mortises as a bent or wall approaches vertical.

The most common stud sizes were 3x4 and 4x4. The 3x4 could be framed flat to the wall with a 1½-in. shoulder and a 1½-in. tenon, or turned on edge for a 2-in. shoulder and a 2-in. tenon. Four by fours were typically framed with a 2-in. shoulder and a 2-in. tenon. In some larger public buildings where the framing was concealed, the studs were as wide as the principal posts so that the interior walls had no protrusions (facing page, Fig. 2). Studs were commonly 6, 7, or 8 in. wide and from 2 to 4 in. thick in such structures. Obviously the barefaced tenon wouldn't work here.

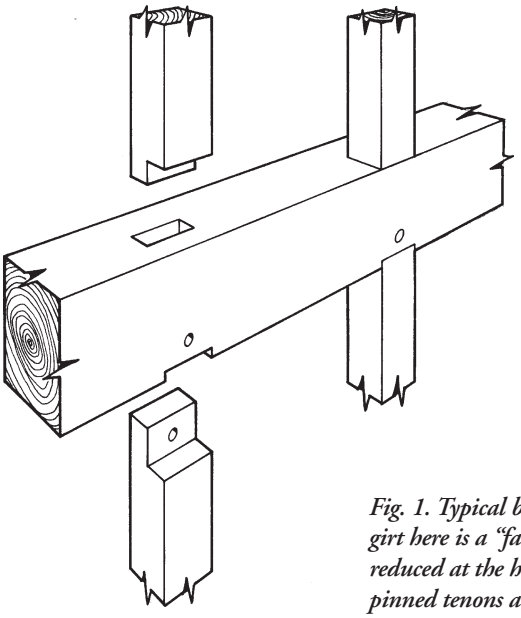

Fig. 1. Typical barefaced tenon wall studs in a square rule building. The top surface of the girt here is a "face" (a reference surface) and thus has no housings. The lower surface is reduced at the housings to the size of the ideal-timber-within. It is common for studs to have pinned tenons at the top end and stub tenons at the bottom.

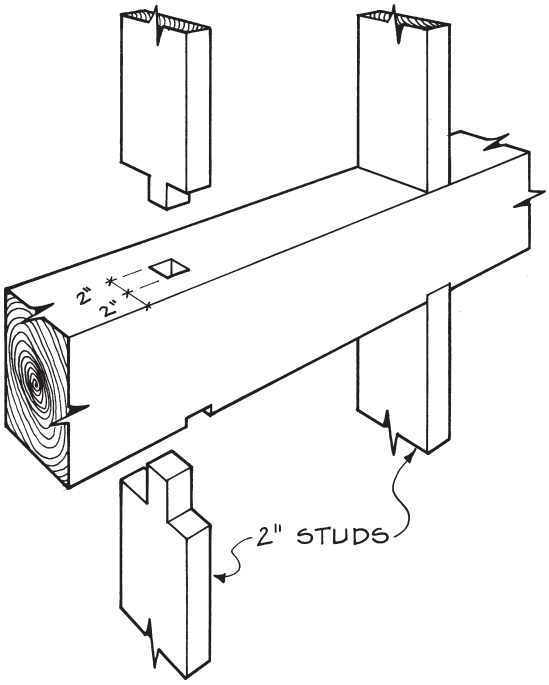

Fig. 2. In churches where the framing was concealed by plaster, studding was commonly as wide as the main timbers, to present a flush appearance on the interior. Here, 2x8 studs are framed by the square rule. Two-in. studs are rarely pinned and occasionally nailed. Tenons on 2-in. stock are quickly sawn out. The mortises require just a single bore.

Where a stud met a brace or rafter, it was rarely mortised in. The stud would be fitted after the frame was reared. Typically it was butted and nailed (Fig. 3). A less common but stronger solution was to use a beveled lap joint (Fig. 4). It too was secured with nails.

This partially withdrawn stud in a barn in Shaftsbury, Vermont, was relieved at its end to make its tenon barefaced. The relief cut was not angled as usual, and gives the appearance of a second cheek and shoulder.

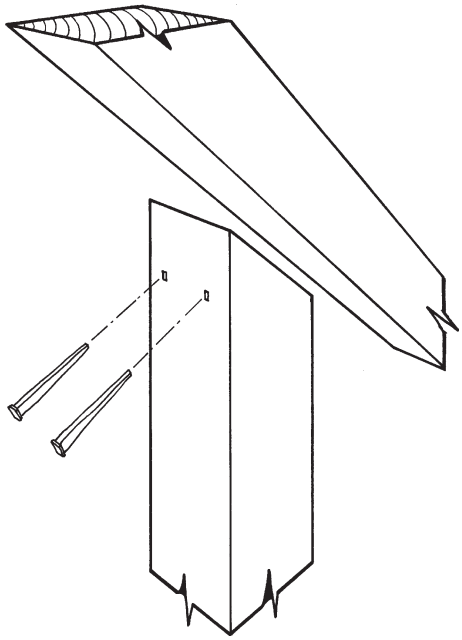

Fig. 3. Studs are subservient to braces (which must be uninterrupted to do their work well) and consequently are merely cut to match the angle and secured with nails. However, the other end of such studs is still tenoned.

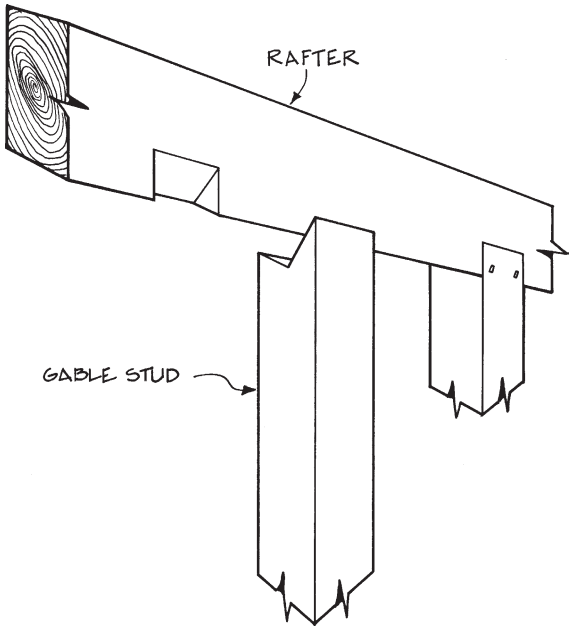

Fig. 4. A beveled lap provides a sound solution to inserting studs after erection. It is a joint easily fashioned in situ.

WALL JOINERY: VERTICAL SHEATHING. When buildings are sheathed vertically, horizontal girts are framed in for support. In barns, where girts are mostly found, these are spaced from 2 to 6 ft. apart. In plank houses where the walls are sheathed in thicker planks, the girts occur only at the floor levels.

Girt joinery closely resembles stud joinery. The barefaced tenon is common, as are the sizes 3x4 and 4x4 (Fig. 5). Many barns built before the advent of the circular sawmill used girts hewn on only one face and squared up to a consistent size only at the joints (Fig. 6). For girts with longer spans or with floor loads to support as well, a standard mortise and tenon replaced the barefaced tenon (Fig. 7).

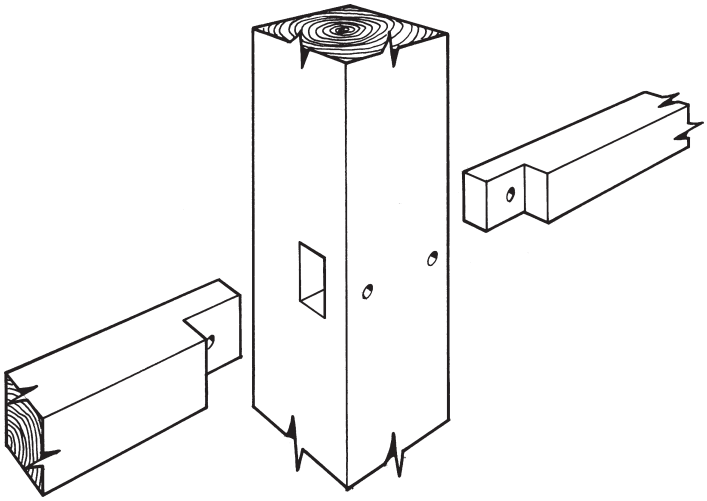

Fig. 5. Barefaced and pinned girts in a typical scribe rule building.

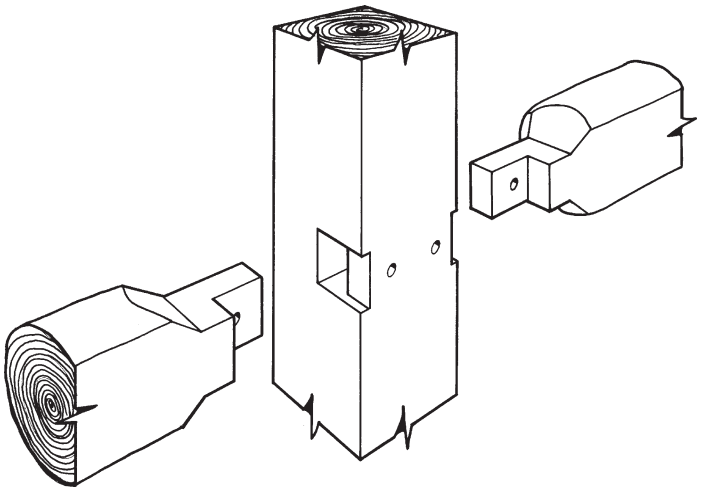

Fig. 6. Barefaced and pinned girts in a typical square rule building. To save on hewing, these members were flattened only on the face receiving the wall sheathing. The ends are squared up at the joint. The post has its ideal-timber-within centered so the girts are housed both sides.

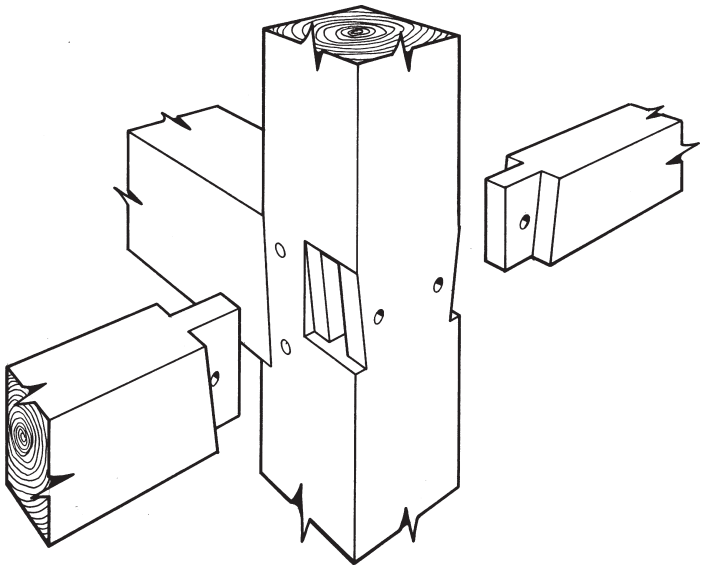

Fig. 7. Wall girts at floor level in a scribe rule building. These load-bearing girts rely on standard mortise and tenon joints with diminished bearing shoulders.

BRACE JOINERY. Few timber-framed buildings were built without diagonal bracing. In the era before plywood sheathing, braces conferred a measure of rigidity to frames and prevented distortion from wind and seismic loads. They can function in compression, tension or both, but braces are counted upon to act primarily in compression and consequently occur in opposing pairs. Many surviving barns have unpinned, stub-tenoned braces, proving the latter's compression-only function. Lap-dovetailed braces, found typically in early structures, appear by their shape to be able to handle tensile loads as well.

Tenoned Braces. The vast majority of tenoned braces are barefaced, as with studs and girts. Braces in frames built using the earlier scribe rule system might have no bearing shoulder (Fig. 8, left) or a diminished bearing shoulder (Fig. 8, right). The latter configuration is clearly superior, adding to the tenon end an additional bearing surface at the nose of the brace, but it requires additional

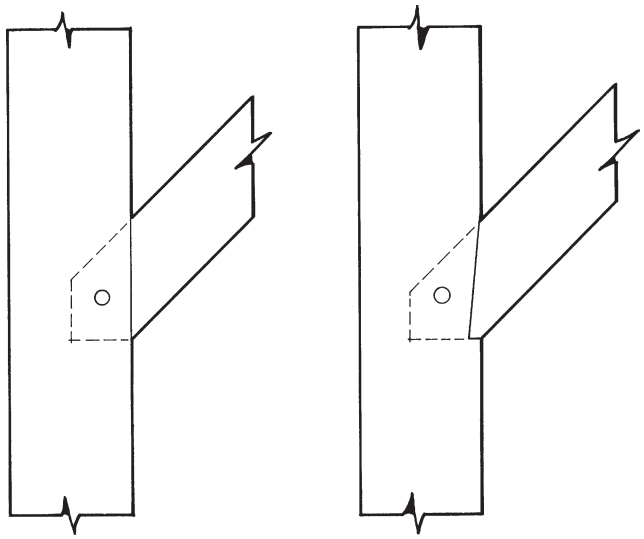

Fig. 8. Scribe rule braces: nonbearing shoulder on the left, diminished bearing shoulder on the right.

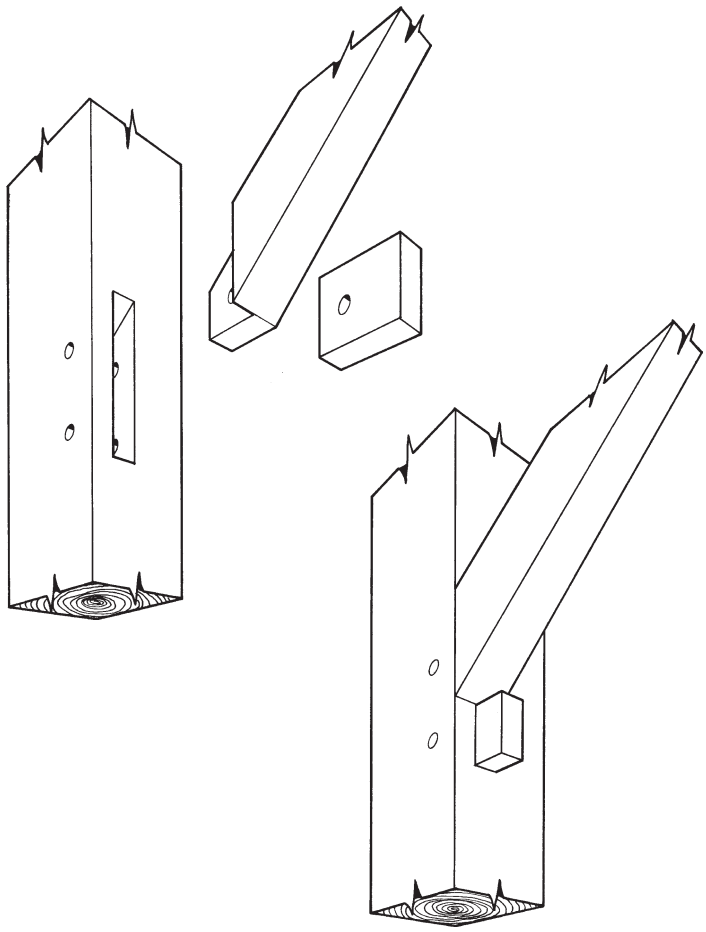

Fig. 10. Brace with packing piece. After the opposite end of this brace was inserted into its mortise, this end was swung into place. A carefully fitted block, here secured with a pin, filled the extra mortise length.

cutting time at the mortise. Square rule braces, meanwhile, would need no housing if entering the *face* (reference surface) of a timber, but, if entering an opposite surface, would be housed deep enough to meet the specified dimension of the ideal-timber-within (Fig. 9, below left). The brace itself might or might not have a bearing shoulder (typically undiminished or parallel), as the carpenter saw fit (Fig. 9). Again, the better choice was to provide the additional bearing at the nose of the brace. In square rule structures, a gap is usual at the unloaded end of the brace mortise, to allow for variations in width of the brace stock, or reflecting cross-grain shrinkage of the brace.

Pinned braces have tenons twice as long as they are thick. As with studs, braces occasionally have stub tenons without pins.

In some scribe rule framing, the mortise at one end of a brace is elongated and filled with a carefully made block (Fig. 10 left). This packing piece may be pinned and have an identification mark. Its purpose was to speed the scribing process by allowing a brace to be cut and inserted without taking apart the assembly. This technique was also used to insert a tenoned brace into a frame after erection.

Where heavy loading was anticipated, carpenters used the standard mortise and tenon with either the diminished or parallel bearing shoulder (Fig. 11 below). In some Dutch barns, massive braces as large as 9x12 support the anchorbeams.

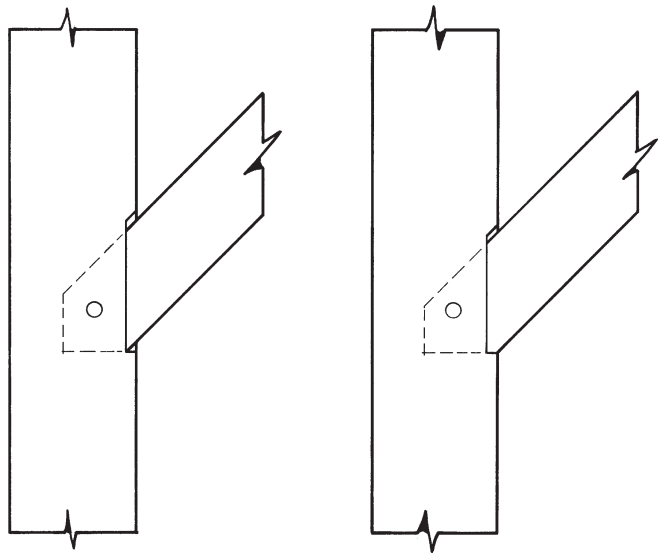

Fig. 9. Housed square rule braces with and without bearing shoulders. The brace on the left would be unhoused if meeting a "face."

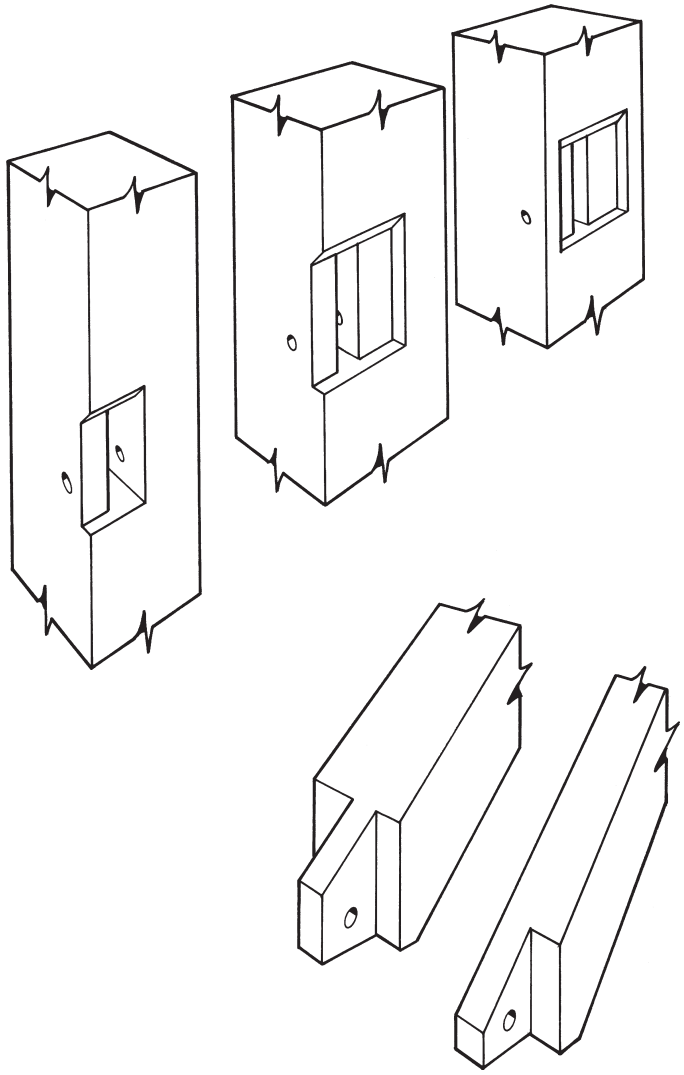

Fig. 11. Square rule brace variations. At top, left to right, barefaced, half-housed and full-housed mortises. Above, full and barefaced tenons. The full tenon joint would be chosen for expected heavy loads.

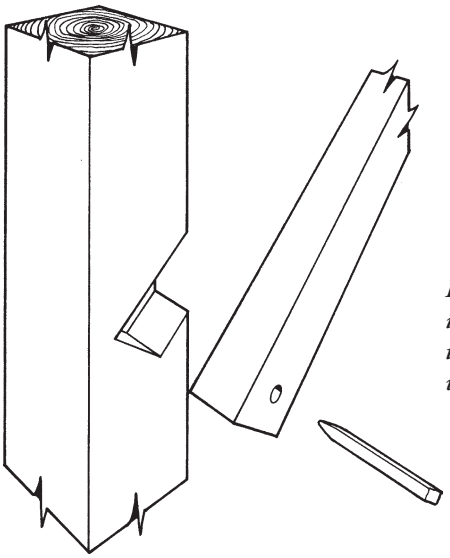

Fig. 12. This simple lap is notched in its full thickness and secured with a squarish pin.

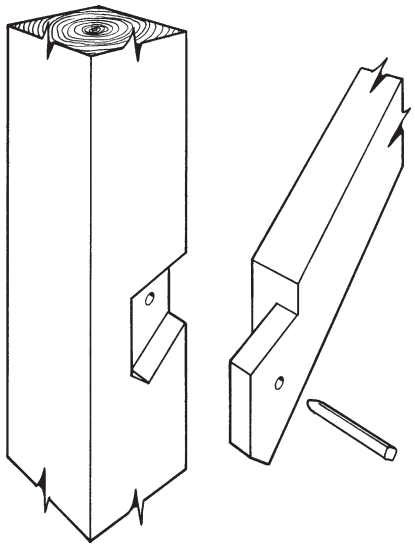

Fig. 13. Lapped half-dovetail with pin. The squared-off end of the mortise was a way to increase the compressive strength of the brace and, more important, to avoid chopping out an acutely angled housing. The width of this facet of the housing usually matches or exceeds the width of the chisel used.

Through-lapped half-dovetails are common. The through housing removes more wood from the post than a stopped housing but can be sawn to full depth, saving considerable chiseling work. The dovetail slope is typically cut on the inner (here lower) edge of the brace. This brace runs from a post down to a tie beam in a scribe rule German barn dismantled in Alcove, N. Y., and moved to Long Island.

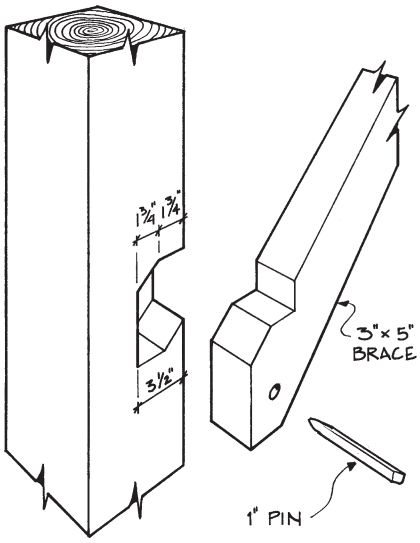

Fig. 14. Notched brace found in a 1700s meetinghouse dismantled in Pownal, Vermont, in the 1970s. It is lapped in its full thickness.

Lapped Braces. Primarily found in early scribe rule frames, lapped braces display three variations: simple, dovetailed and notched. The simple lapped brace may be half lapped (let in half its depth) or full lapped (let in full depth), as shown in Fig.12. A squarish pin secures the brace from popping out and gives it some modest tensile capacity. The advantage of these simple lapped braces was in the labor they saved during scribing and cutting. Time has proved their effectiveness.

The half-dovetail lap improved tensile performance with only slightly more labor (Fig. 13). As the brace is pulled, the dovetail jams on the nonparallel edges of its housing. But shrinkage after cutting diminishes the effectiveness of the dovetail, whereupon the pin must again handle tensile load. Full-dovetail laps (both sides angled) were rare.

The notched lap (Fig. 14) worked differently from the half-dovetail, and it was less affected by shrinkage. However, it entailed more cutting time. There was less sawing and more chopping. Interestingly, this joint is found on one of the oldest surviving timber-framed barns in England, the Barley Barn at Cressing Temple ca. 1200. The joint persisted in America (though in limited use) until the end of the scribe rule era.

Special bracing types. Other devices were used than the standard diagonal brace to stiffen a structure. Early Dutch houses occasionally have "corbels" that function both as brace and (like the masonry counterpart) as support. In some German, French, Swiss, Polish and Danish structures, the walls include distinctly leaning studs (*streben* in German, *écharpes* in French). These serve both as post and brace, thus saving framing time and often carrying bracing loads directly from plate to sill. Finally, in coastal communities with a shipbuilding tradition, carpenters sometimes resorted to naturally crooked ship's knees for bracing, which gained headroom and shortened effective beam spans.

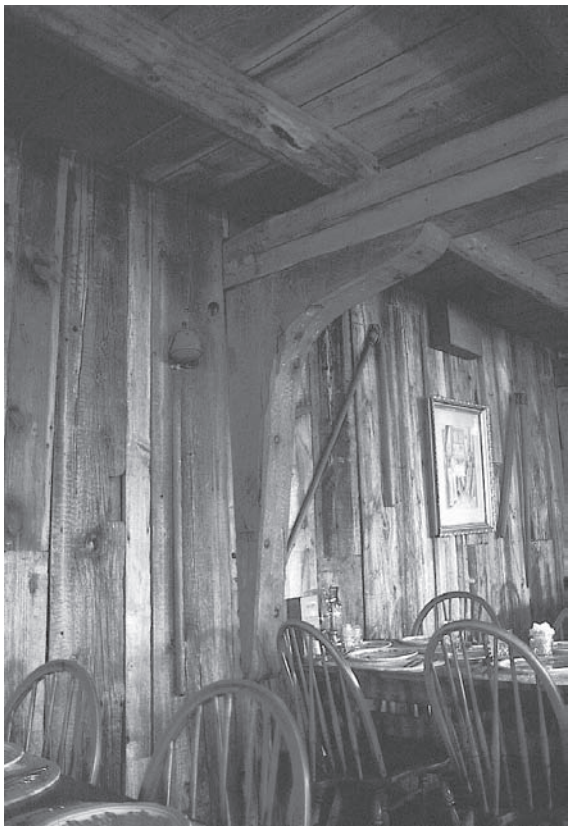

To conserve headroom, knees were used in buildings as well as ships. Cut from naturally curved, tough root-trunk or trunk-branch portions of the tree, they were pinned or bolted to the post and crossbeam. This one stiffens a Kennebunkport, Maine, gristmill and restaurant.

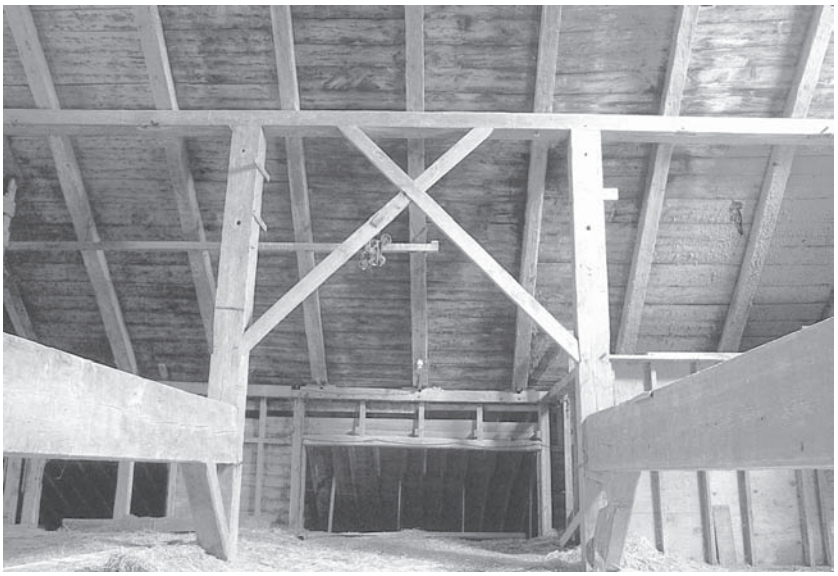

Dutch barns often had extremely long braces. In this upstate New York example, they are half-lapped where they cross.

In Dutch houses with closely spaced wall posts, builders might use passing braces to achieve a long (and so more effective) brace length. In this house undergoing renovations in Alford, Massachusetts, the brace passes one post where it is lapped its full thickness and secured with a pin. Below, in lieu of normal braces, some German carpenters would angle a stud to serve as both brace and stud, as in this structure in Ephrata, Pa.

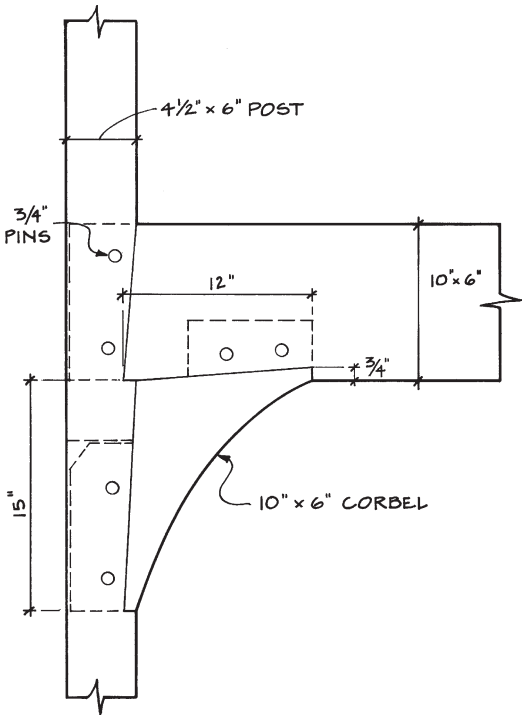

Fig. 15. Some early Dutch houses used short, solid braces called corbels, which protrude less into the interior space than standard braces and form a decorative feature. This example is from an 18th-century house (now dismantled) in Muitzenkill, N.Y., on the upper Hudson River.

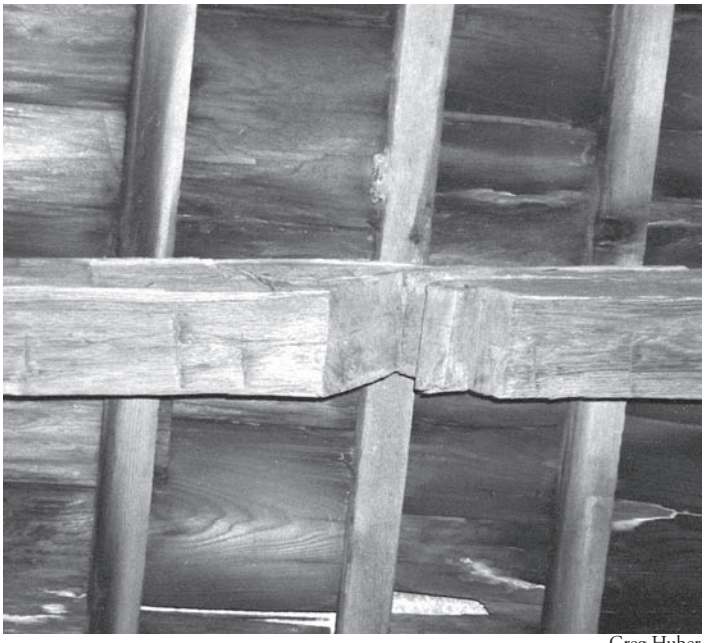

Greg Huber

Overhead view of a reused rafter supporting battens and shingles in a ca.-1825 barn in Somerset County, N.J. In its original location, the unusual purlin seat in the underside consumed about two-thirds of the rafter depth (see Fig. 22). Because of short grain in the tenon, such a connection would be restricted to roofs steeper than 12-pitch.

V. Roof Joinery Excluding Trusses

IN the design of timber-framed buildings, the roof is the dominant element. The structural system necessary to support its expanse greatly influences the total building design. In masonry buildings, the roof structure may be the only timber-framed element. The carpenters who timber framed America hailed from European countries where roofs were predominantly thatch, tile and stone. In America, the abundance of excellent timber and the economy of working it led to a preponderance of board and wood-shingle roofs. The timber quality also affected the framing choices. In Europe, efficient use of timber was essential. Timber-framed buildings included members of all sizes, shapes and lengths, making the best use of the forest. Here, time and labor constraints dictated timber selection. In general, using longer, straighter timber required less joinery work. Thus it made sense to use the best, burning the rest in the fireplace. One can easily see how the abundance of wood here changed roof carpentry.

COMMON RAFTERS. The simplest roof system comprises only rafters spanning from plate to peak. When all rafters carry a similar share of the roof load, they are referred to as *common* rafters. Common rafters occur frequently on gable-roofed buildings up to about 30 ft. wide. Beyond that width, the rafters become excessively long and heavy, and the outward thrust on the plates becomes unmanageable. Many common-rafter roofs have collars connecting every rafter couple. Contrary to popular belief, these collars aren't ties to prevent spreading; they function as struts to stiffen a long rafter span.

On wider gable roofs, the span of the common rafters was shortened by introducing a pair of purlin plates, usually at the mid-span of the rafter. These purlin plates also reduced the outward thrust at the plates considerably. We will look at the joints where common rafters meet the plate, peak and purlin plate.

Rafter-plate Joints. The simplest joint between rafter and plate is a level cut on the rafter and no cutting on the plate, a *butt joint*. Nails, pins or both are used to secure the joint. Though hardly to be classified as joinery, it could be effective and economical if well secured. Examples of this connection survive from all periods.

A better solution was to cut a *birdsmouth* in the rafter to bear against the inside edge of the plate (Fig. 1). This simple joint, named after its similarity to the open beak of a bird, could handle the thrust without loading the nails or pins. Unfortunately, the roof thrust in tandem with the natural checking tendency of a boxed-heart rafter causes a split to develop at the mouth that can be its ruin. The situation is further exacerbated by shrinkage. Acute angles on the ends of timbers become more acute as they season and shrink; thus the load is borne by the feathered extremes of the birdsmouth. The same weakness can be worsened by a waney or out-of-square plate.

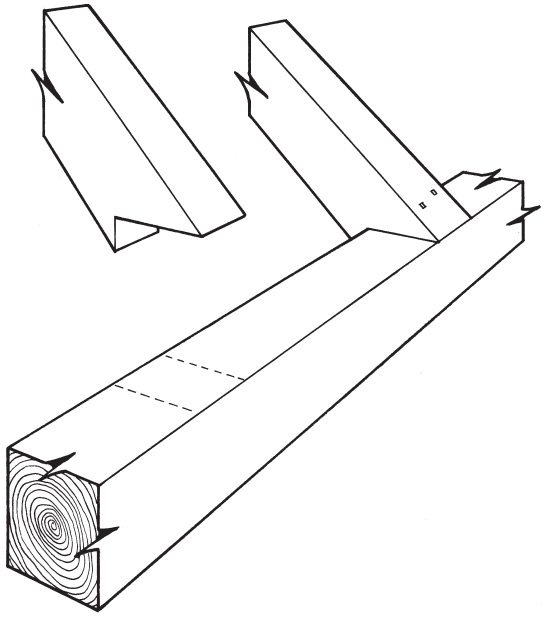

Fig. 1. With a birdsmouth cut to fit the inside of the plate, roof thrust is adequately resisted. Here the joint is secured with nails.

To counter these concerns, some builders used a *housed birdsmouth* joint (Fig. 2, facing page). The lower edge of the rafter is supported in a pocket, increasing its shear strength substantially. Occasionally, the top of the plate had a gain to receive the rafter. This may have been done to get a good bearing on a roughly hewn plate or to increase the overhang slightly.

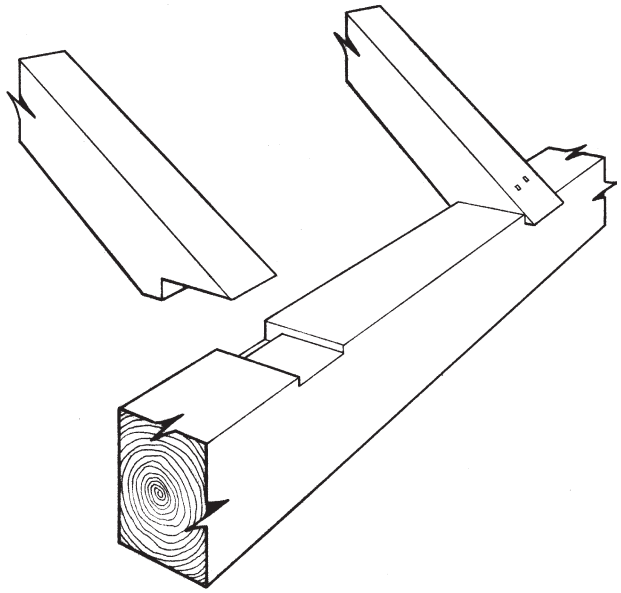

Fig. 2. The housed birdsmouth supports the lower side of the rafter and eliminates the tendency of the rafter to split up the mouth. This example is also housed into the top of the plate.

In many New York State Dutch barns, the large-section (7x7, 8x8) rafters terminated in 2-in. stub tenons (Fig. 3, at right). Sometimes the tenons were barefaced (as shown), sometimes double-shouldered. Though the resulting mortise is strange (one expects a mortise to run parallel with the grain), the joint functions much like a housed birdsmouth. On the gable end rafters there can be relish between the mortise and the end of the plate. These joints often had no fastenings.

Rafters with Tails. To keep rainwater off the side of a building, builders used rafter-plate joints that allowed the rafter to project beyond the plate (Fig. 4). These extensions, called "tails," could support a boxed-in cornice or could be exposed, as on a barn.

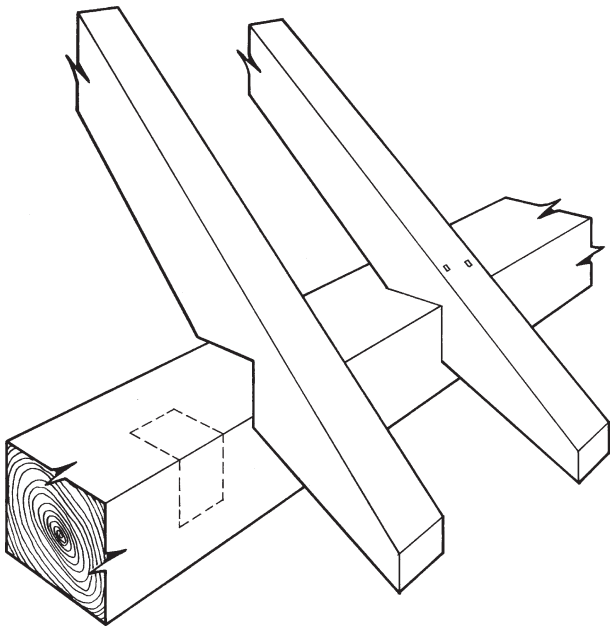

Fig. 4. As is popular today in light framing, the birdsmouth in this late 19th-century barn in Root, New York, is reversed to fit the outside of the plate and the rafter raised to avoid notching the plate. Though the fastenings must resist thrust, there can be a substantial overhang.

Rafters from a Great Barrington, Massachusetts, carriage shed showing a housed birdsmouth. This joint could be completely sawn.

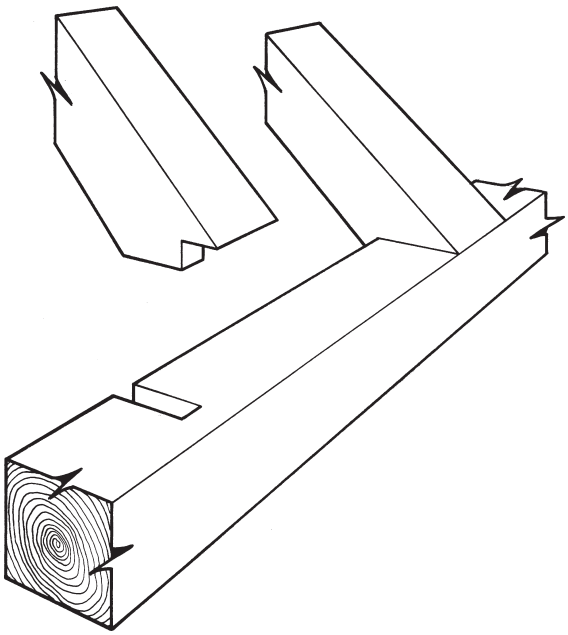

Fig. 3. On large Dutch barn rafters, a birdsmouth stub tenon is common. This example is barefaced.

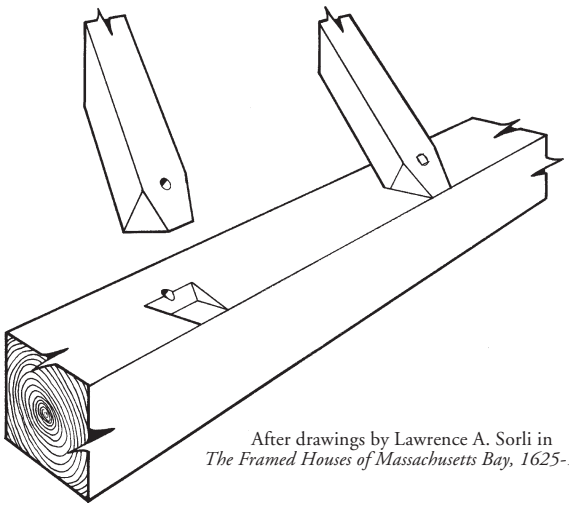

After drawings by Lawrence A. Sorli in
The Framed Houses of Massachusetts Bay, 1625-1725

Fig. 5. Unusual rafter feet found in the ca. 1637 Fairbanks house in Dedham, Mass., and the Samuel Pickman house in Salem (before 1681). The dovetail matrix is apparently designed to resist roof thrust.

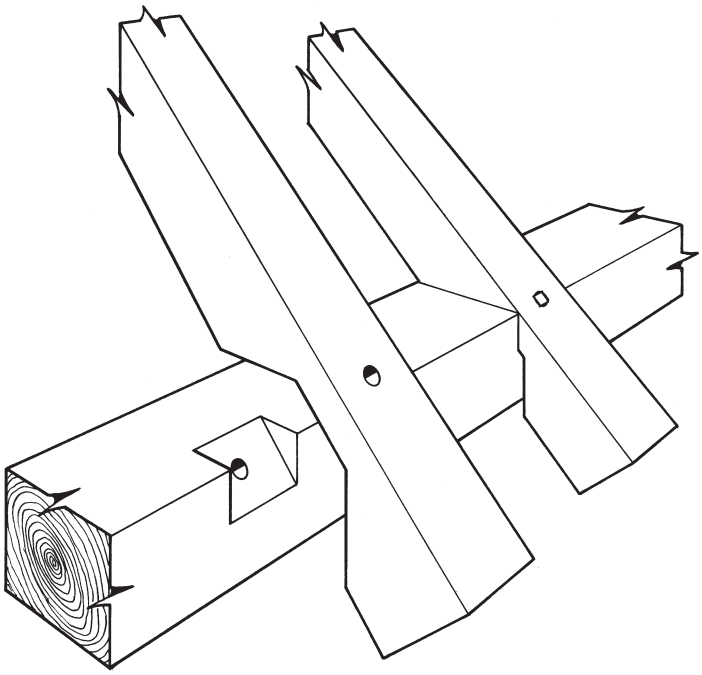

Fig. 6. In a mid-19th-century house in Shelburne, Massachusetts, the rafters have a level cut with a through tail to support a cornice.

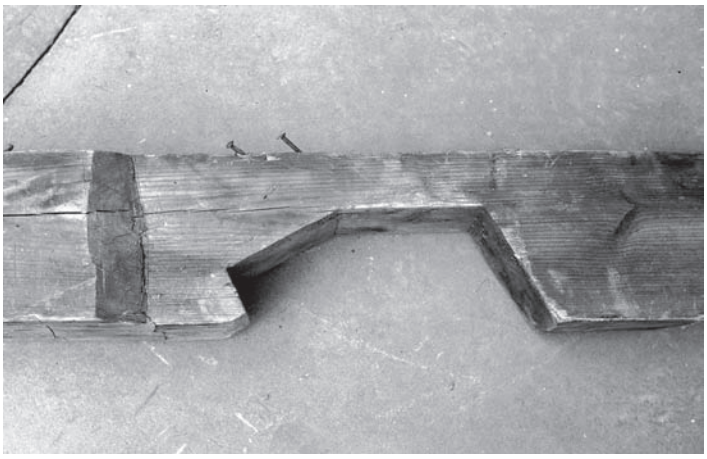

Rafter with housed birdsmouth and through tail from an 18th-century Dutch house in Muitzenkill, New York. Three of the five cuts could be sawn; the other two had to be chiseled.

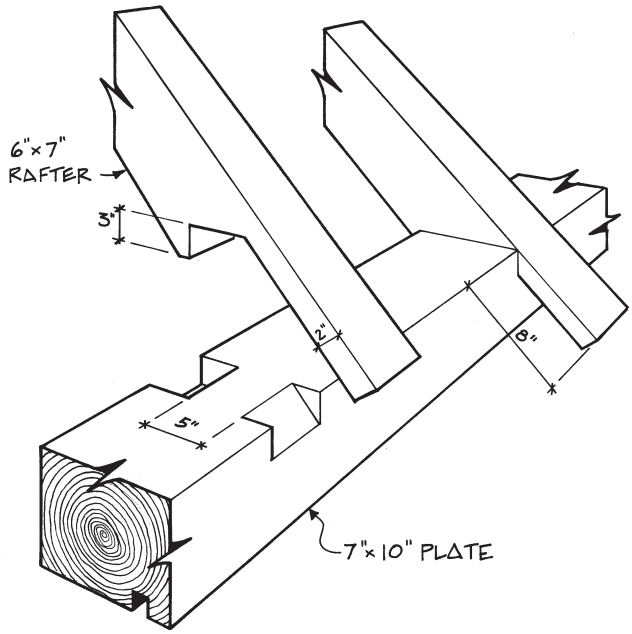

Fig. 7. Housed birdsmouth rafters with through tails found in a well-crafted 18th-century barn formerly in Hoosac, New York. Rafters were supported at midspan by a purlin plate and joined to a ridge at the peak. Groove in the underside of the plate was for vertical wall boarding.

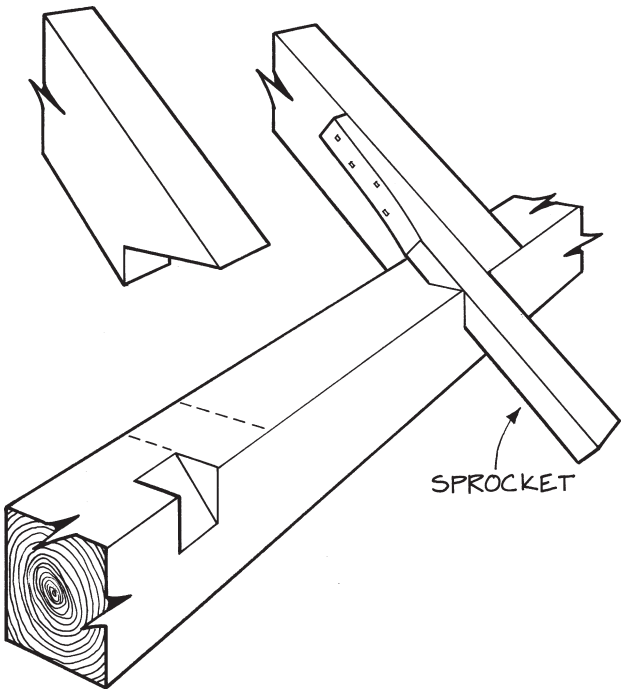

Fig. 8. Tails were often added to rafters to provide an overhang. These tails or sprockets are nailed or pinned in place. They can also be angled to provide a pitch change at the eave.

The simple level-cut butt joint can be provided with a tail. To minimize cutting, the roof plane is raised a couple of inches to allow the tail to extend past the plate. If the roof plane touches the corner of the plate (an arrangement that builders seemed to prefer), then the plate must be notched to allow the tail to pass (Fig. 6). As with the butt joint, the thrust must be resisted by the fastenings.

A stronger solution is the *birdsmouth with through tail* (Fig. 7). This requires more notching in the plate but resists the roof thrust well. Its disadvantage is that the level cut on the rafter cannot be sawn out; it has to be chiseled. The tediousness of this operation would seem to account for the rarity of this joint.

The best solution for connecting rafter and plate, at least to this author and builder, is the *step-lap rafter seat* (Fig. 9, facing page), the joint found more often than any other. It was used on one of England's oldest buildings, the Barley Barn at Cressing Temple, ca. 1200 (see Cecil A. Hewett's *English Historic Carpentry*), and was a standard here in America. It performs well in all respects, including economy. Though it appears complex, it is fairly simple to fabricate. The rafter has only one sawcut (not including the end of the tail), and that at 90 degrees. The axe or adze can be used to swiftly shape the surfaces toward that sawcut. The plate notches involve sawing and chiseling but can be cut quickly, with the inner V-notch presenting the only difficulty. The step is usually either 1½ or 2 in., and the tail thickness the same. The shape of the tail depends on the cornice detail and the builder.

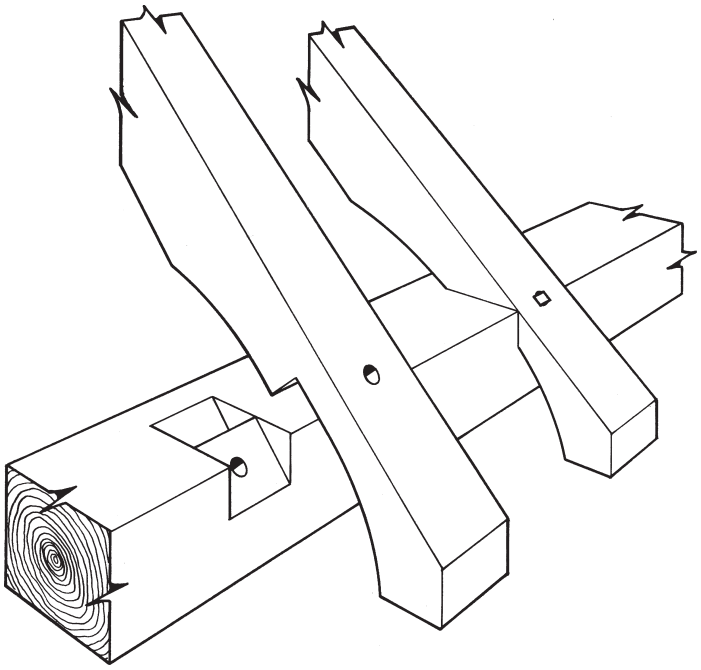

Fig. 9. The step-lap rafter can be shaped with an adze. Here the tail has a plumb and a level cut to support a cornice. A squarish pin through the tail secures it.

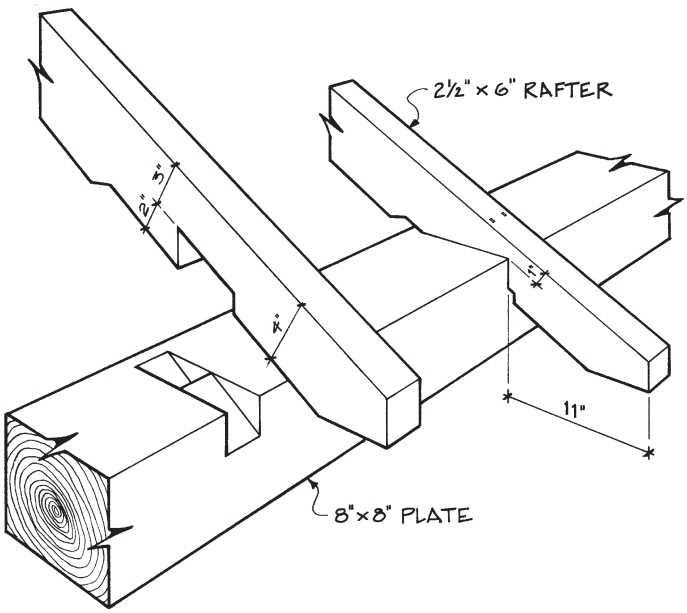

Fig. 10. Variation of the step-lap with plumb abutment. The roof plane is also elevated above the edge of the plate to increase the tail strength in this mid-19th-century carriage barn in Adams, Massachusetts.

Step-lap rafter seat at the end of a plate from a house in Windsor, Mass., from the early 1800s. The squarish pin, here to be driven through the rafter body rather than the tail, kept the rafter from slipping off the end of the plate.

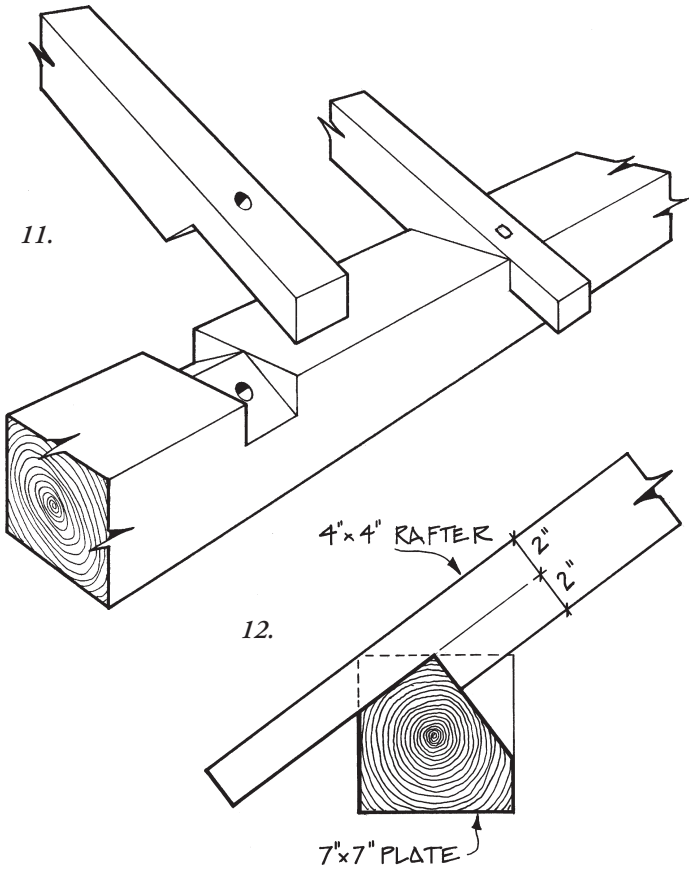

Figs. 11 and 12. The builder of a 19th-century barn in South Lee, Massachusetts (11), attempted to improve the step-lap seat by making it easier to cut. Here both parts of the seat could be sawn full depth, but the obtuse-angled rafter abutment tends to ride up and over the plate from the thrust of the roof. Fortunately, the roof loads in this 20x20 barn are small. The builder of a Rowe, Massachusetts, barn addition (12) also redesigned the rafter seat. Unfortunately, with its lower edge unsupported, the shear strength of the rafter is severely diminished, and the plate is also weakened by losing its remaining upper arris.

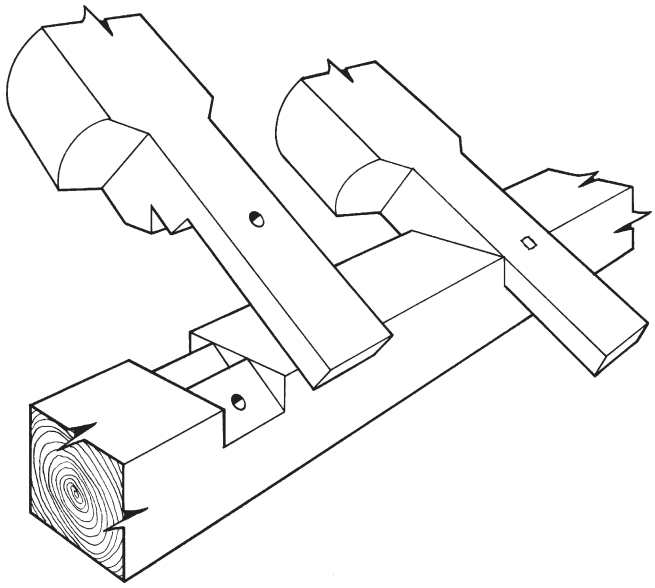

Fig. 13. The ultimate rafter-plate joint must be this example found in an 18th-century barn in Sheffield, Massachusetts. It combines the step-lap with the housed birdsmouth to create this magnificent but obviously time-consuming joint.

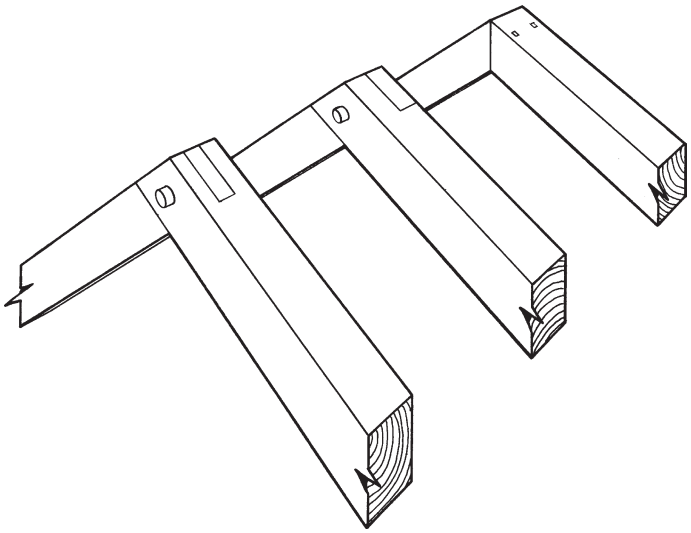

Fig. 14. Above, from left, three forms of joint for common rafters at the peak: open mortise and tenon, half-lap, butt.

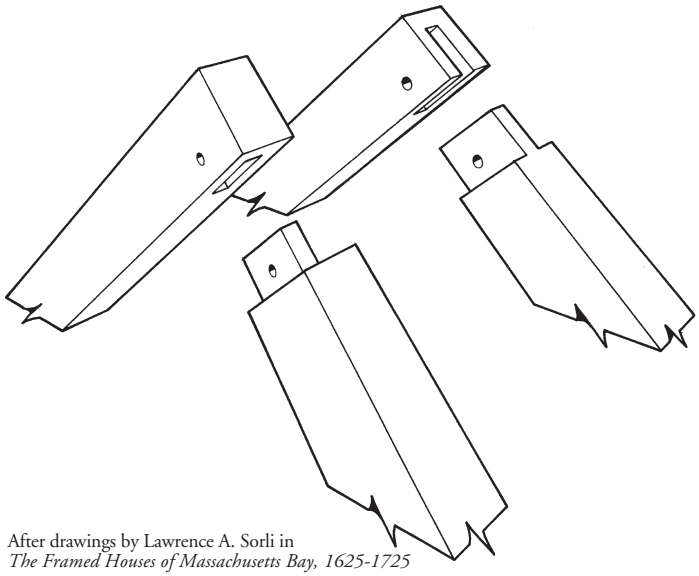

After drawings by Lawrence A. Sorli in
The Framed Houses of Massachusetts Bay, 1625-1725

Fig. 15. On deeper section rafters, there may be some economy to these variations of the mortise and tenon. At left above, principal rafters in the ca.-1665 Gedney house, Salem, Massachusetts; at right, principal rafters in the Fairbanks house (1637), Dedham.

Rafter-to-Peak Joints. Where common rafters reach the roof peak, they may be joined to each other or to a ridge beam or a ridge board. When joined to each other, they are butted and secured with nails, half lapped with a pin, or mortised (open or blind) and pinned (Figs. 14 and 15). Of these, the mortised joints perform the best but require the most time to execute.

Ridge beams often appear in common-rafter roofs. They are continuous members, occasionally scarfed, and typically cut out to permit a center chimney in houses. Though it requires more joints to be cut, the use of a ridge evens out any slight variations in rafter length to create a straight ridgeline and makes possible wind bracing down to the rafters.

The sides of the ridge are perpendicular to the roof slope and, unless the roof pitch is 12/12, the cross-section usually ends up five sided (Fig. 16). Pin holes are offset toward one edge of the joint so they don't intersect the opposing ones. As a result, all rafters are

View down the ridge beam of a mid-19th-century 40x50 barn in Hinsdale, Massachusetts. The 3x4 rafters have barefaced tenons.

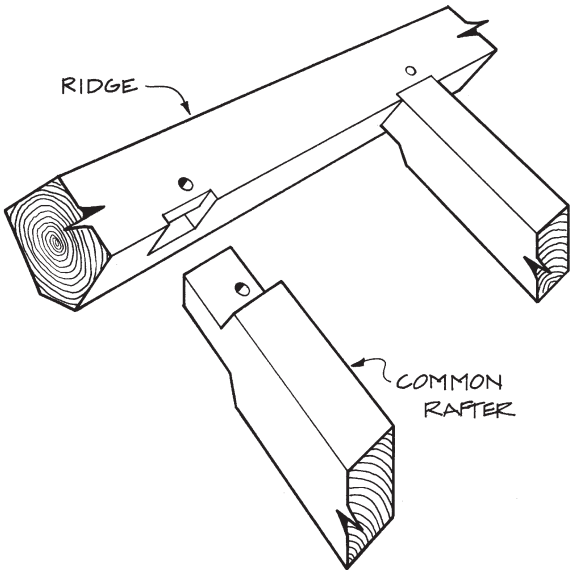

Fig. 16. The typical ridge beam, here a square rule example, is sized to accommodate the rafters. Pin holes for rafter tenons are offset to avoid pins intersecting below the mortises. The ends of the tenons are cut plumb (mitered) to provide maximum relish beyond the pin holes.

identical except the gable ones. They have narrower tenons to accommodate relish in the ridge mortises. In a few structures, the ridge ran uninterrupted below the rafters. Then the rafters joined each other above. A less satisfactory but still effective ridge was a ridge board. Here, the rafters butted a board or plank and were nailed (Fig. 17, facing page). This arrangement became common in the late 19th century and early 20th century, and is typical of stick framing today. A variation has shallow gains cut into a plank ridge to set the spacing and resist twisting of the rafters.

Rafter-to-Purlin Plate Joints. On wide buildings with purlin plates, if the purlin plate is set level, connections similar to the rafter-to-plate joints may be used. Because support from the purlin plate reduces the outward thrust of the roof, the joinery here may be quite simple. A simple notch to fit around the purlin plate (a modern birdsmouth) with a substantial pin is common in Dutch barns (Fig. 18). Also common is a through notch where the rafter may pass through undiminished or be reduced to a consistent size (Fig. 19). In some Dutch barns, this through notch is not sawn but shaped with an adze as a sort of chamfer a couple of feet long.

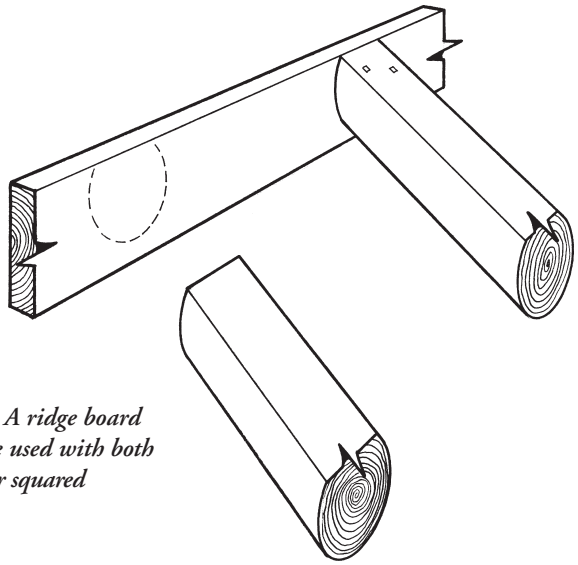

Fig. 17. A ridge board could be used with both round or squared rafters.

18.

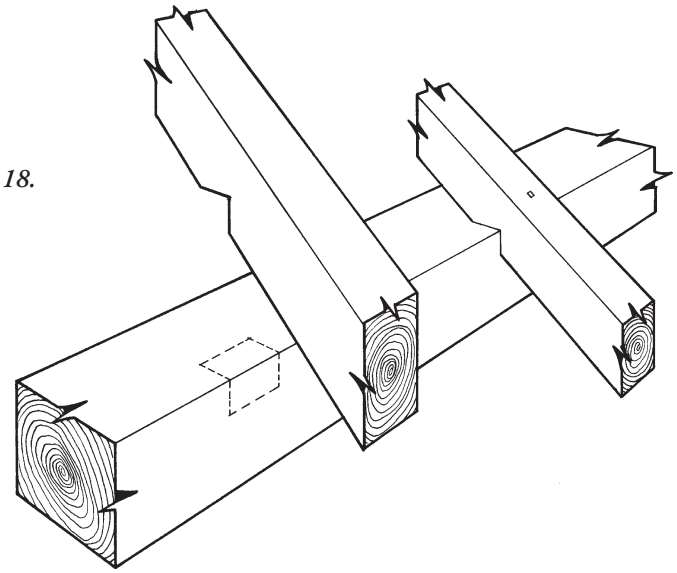

Figs. 18 and 19. Above (18), a simple birdsmouth cut on the outside of the purlin plate is quite common in Dutch barns. A pin or spike is used to secure it. Below (19), rafters are reduced to a consistent, smaller size where they pass over the purlin plate. Only the pin resists thrust.

19.

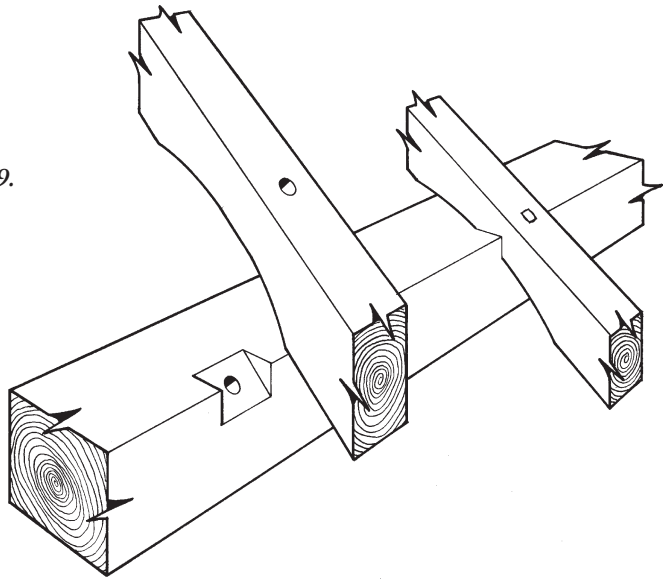

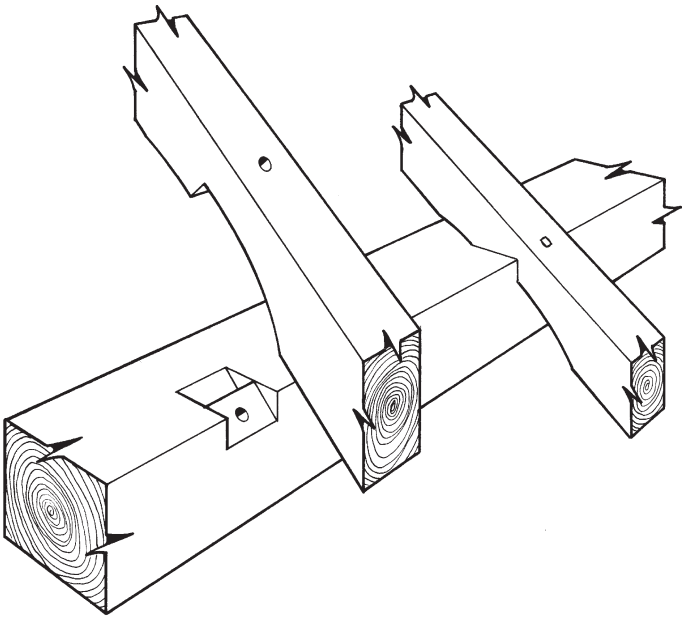

Fig. 20. The step-lap works equally well on purlin plates, but the rafter cross-section at the through point is deeper than the tail at the plate. Note how the rafter stands above the corner of the purlin plate.

In buildings with the step-lap rafter seat at the plate, the purlin plate will often have the same seat (Fig. 20). The rafter, however, is elevated above the corner of the purlin plate to maintain sufficient rafter thickness.

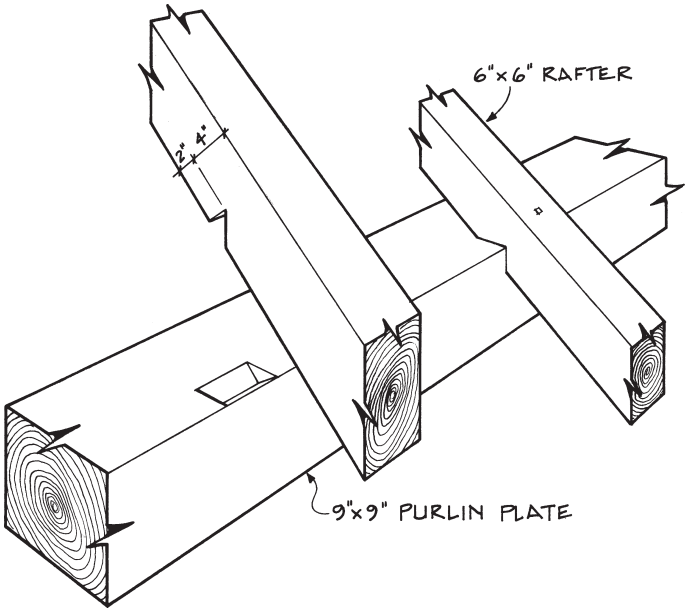

Fig. 21. This purlin plate joint was found in a 45-ft.-square barn in Middleburg, New York. It is simple and effective.

Mid-19th-century Hinsdale, Massachusetts, barn before dismantling. The continuous purlin plate assembly is canted perpendicular to the roof, and the purlin plate is flush with the roof. The rafters tenon into both upper and lower faces of the purlin plate.

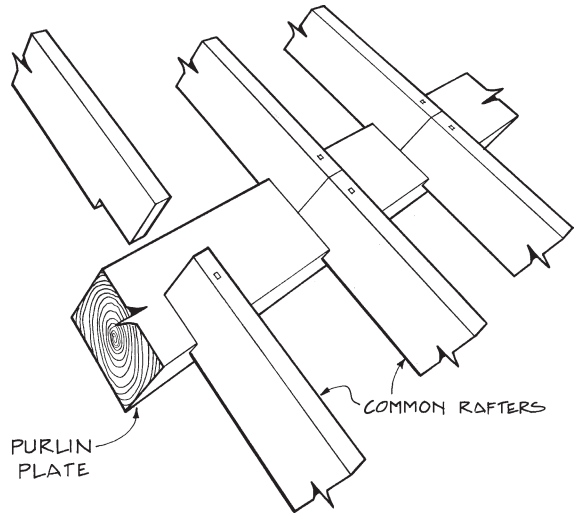

Fig. 23. Canted purlin plates eliminate considerable cutting since rafters (here sized and butted) can pass over the purlin plate.

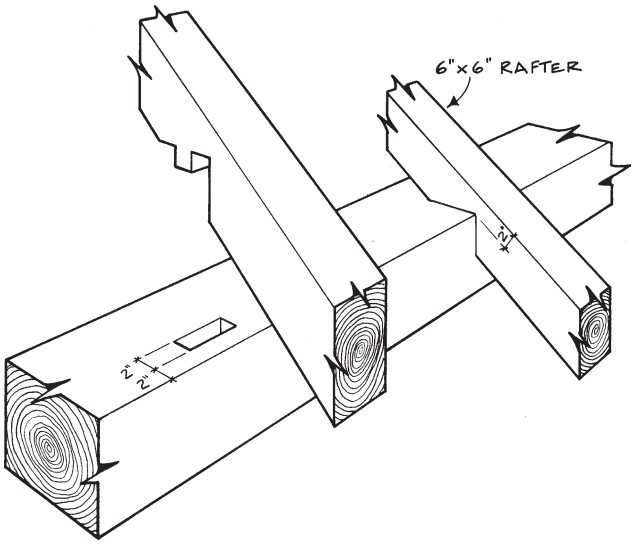

Fig. 22. A reused rafter in a ca.-1825 Somerset County, N.J., barn implies this unusual purlin joint in its original location. Because of short grain in the tenon, its application would be best for roofs steeper than 45 degrees. The rafter section is reduced to one-third at the joint.

24.

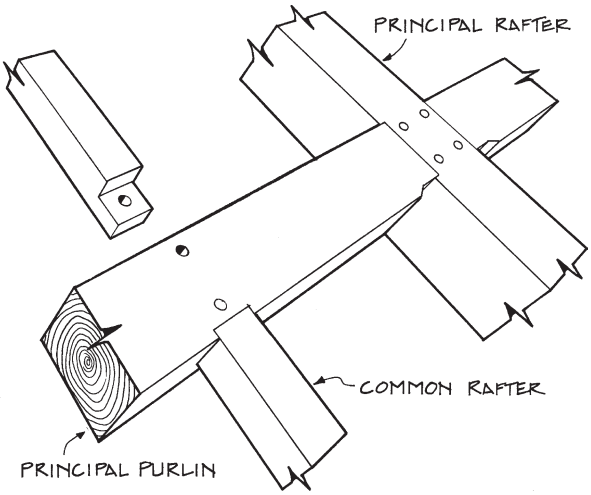

Figs. 24 and 25. Above (24), a flush principal rafter-principal purlin-common rafter roof, with rafters tenoned into the purlin, itself tenoned to the principal rafter. Below (25), purlin framed below principal rafter and through rafters notched where they cross the purlin.

In the mid-19th century, when purlin plates and their canted posts were framed perpendicular to the roof slope, as shown at top, the rafter joints were simplified. In many barns, rafters continued across the purlin plate undiminished and secured with nails. Often they were sized down to a consistent section, where a shallow square abutment increased thrust resistance (Fig. 23). Or, they could be two short rafters simply butted over the purlin plate.

If the purlin plate was flush with the roof plane, the rafters could join with a simple mortise and tenon (Fig. 24).

PRINCIPAL RAFTER-PRINCIPAL PURLIN-COMMON RAFTER ROOFS. This most elaborate roof system includes purlins supported by principal rafters. The purlins may be tenoned between the principal rafters or run over them, and the common rafters then span between the principal purlins (Fig. 24) or run over them (Fig. 25). The advantages of such a design to warrant the extra cutting work are that the common rafters can be shorter and of lighter scantling, and bracing can be conveniently framed in to

25.

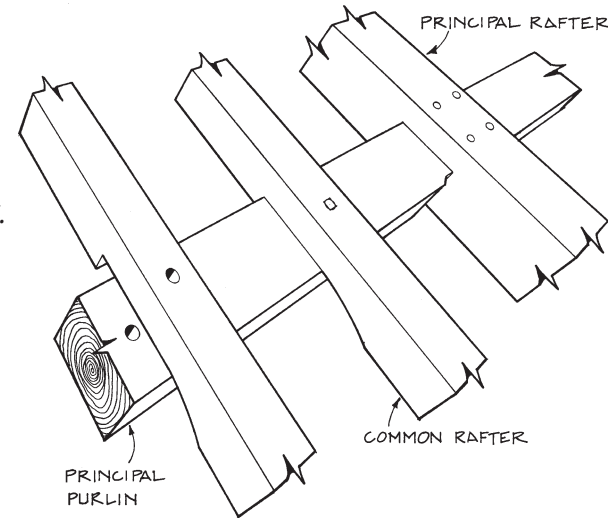

stiffen the roof. (Since many 17th-century roofs were not sheathed completely with boards, the roof framing required bracing.)

The principal rafters were typically tenoned at their feet into tie beams, creating a rigid triangle at each cross frame. (See Chapter 2 and the discussion of the English tying joint.)

The joinery that accompanies this roof type varies depending on whether all or some of the members are flush with the roof plane, as seen in Figs. 24-27. Common rafter joints at plate and peak are unchanged from those already addressed.

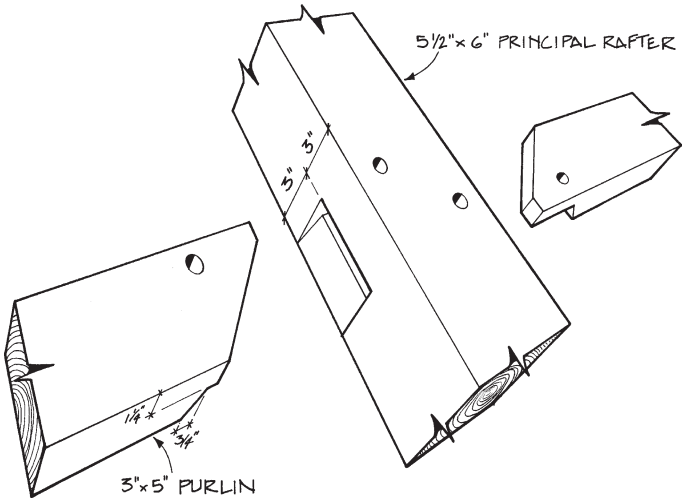

After drawings by Lawrence A. Sorli in
The Framed Houses of Massachusetts Bay, 1625-1725

Fig. 26. Rare purlin-to-principal rafter joint used in the 1668 Turner house (the House of the Seven Gables) and the 1665 Gedney house, both in Salem, Massachusetts. Its advantage lies in the way a fairly narrow principal rafter could accommodate two purlin tenons with sufficient pin hole relish to be effective.

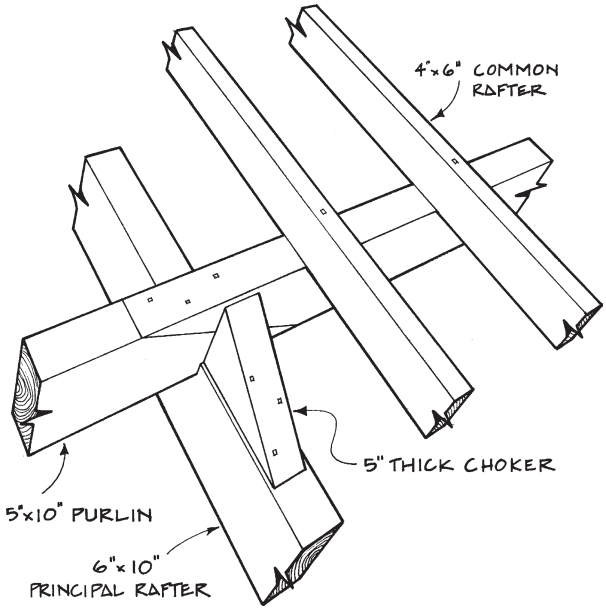

Fig. 27. In trussed roof buildings, the purlins may bear on top of the principal rafters, as shown here in the Cabildo in New Orleans. The deep-section cypress purlins are scarfed over the principal rafter in what the French refer to as a "whistle cut." The purlin end cut is then recycled as a sort of cleat, a "choker," to keep the purlin from rolling.

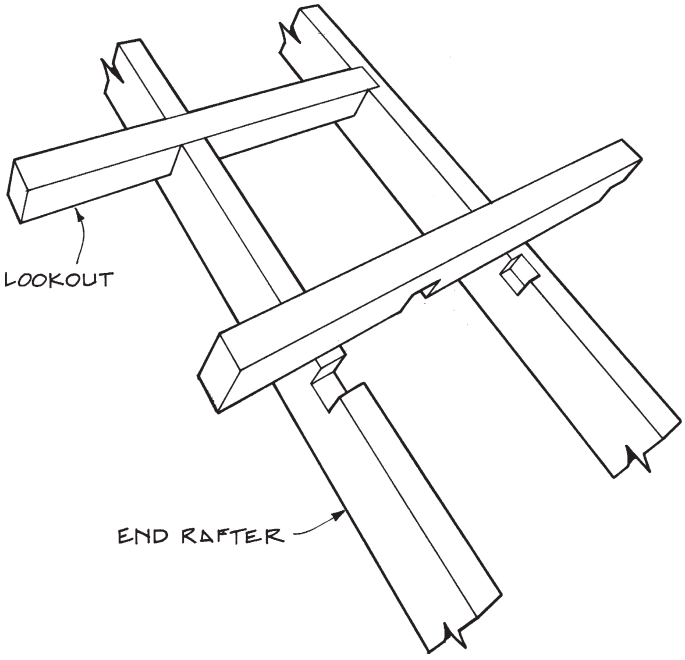

Fig. 28. In common-rafter roofs where a substantial rake overhang is required, "lookouts" are framed to cantilever out.

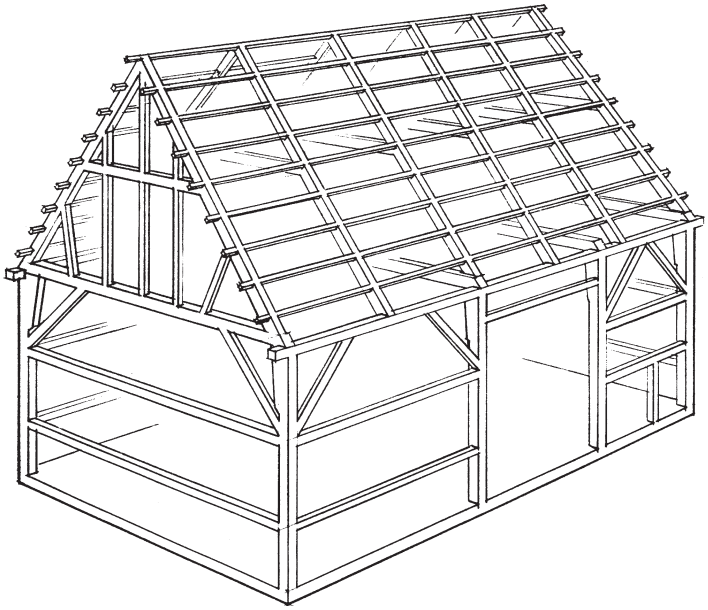

Fig. 29. This 17th-century barn in Seekonk, Massachusetts, has principal rafters spaced a little over 6 ft. apart with 2x3 common purlins spaced about 2 ft. on center. The purlins extend past the gable to provide an overhang.

PRINCIPAL RAFTER-COMMON PURLIN ROOFS. This roof type is most common in eastern New England. The oldest common purlin roof remaining from the Massachusetts Bay colony is on the Coffin house at Newbury, ca. 1654 (see Abbott Lowell Cummings, *The Framed Houses of Massachusetts Bay, 1625-1725*). In the earliest examples, this roof type was not sheathed with boarding but covered with thatch or riven shakes. In some later examples, the roof sheathing, running vertically, was a weathertight board-on-board. The additional expense of framing a common purlin roof instead of a common rafter roof was apparently justified by the savings of a board covering compared with a shingled one.

Common purlins usually run continuously across the rafters and often extend at the gable to support the rake overhang. In two-bay houses and smaller barns, the purlins typically run the full length of the building and are often hewn from slender trees. Common purlins up to 40 ft. long are not unusual, but in larger structures they more often are made up of two or more lengths, hewn or sawn. Where purlins meet, they may be staggered or scarfed. Because the chimney normally runs through the peak, the ridge purlin in houses can be in two lengths and doesn't require a scarf.

The typical common purlin-to-principal rafter joint is a through trench in the rafter with a pin to secure it. The purlins may pass at full size or be reduced or halved in the trench (Figs. 30-34). Fig. 35 on the back cover shows the special case of a hip roof. Common purlins are often small (1½ in. x 2½ in. up to 3x5) and are usually laid flat.

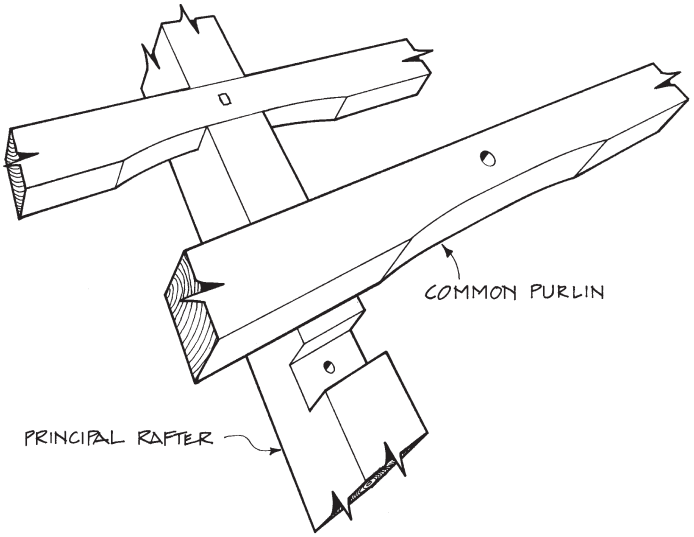

Fig. 30. Common purlins are typically trenched across the rafters and secured with a squarish pin. Here they are reduced to a consistent width with an adze.

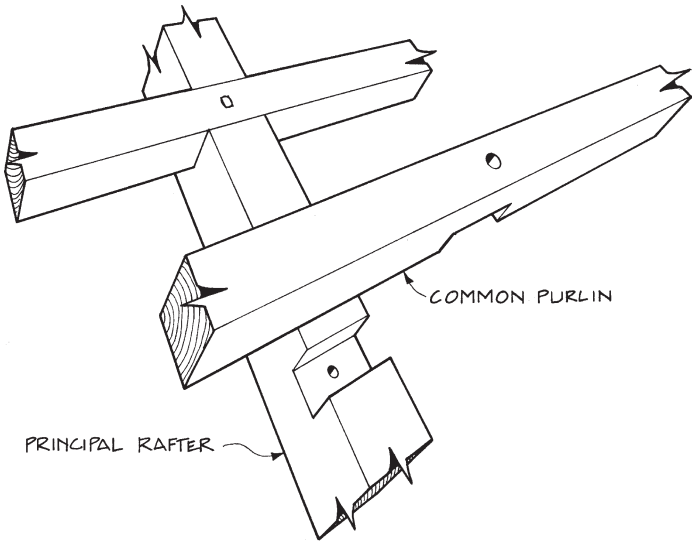

Fig. 31. To avoid unduly weakening principal rafters, deep-section purlins are notched or halved where they cross.

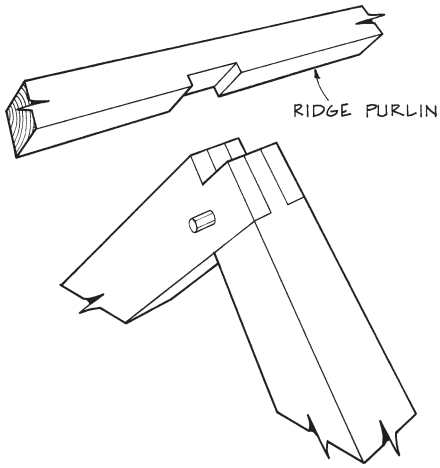

Fig. 32. The mortised rafter receives the notch for the ridge purlin.

33.

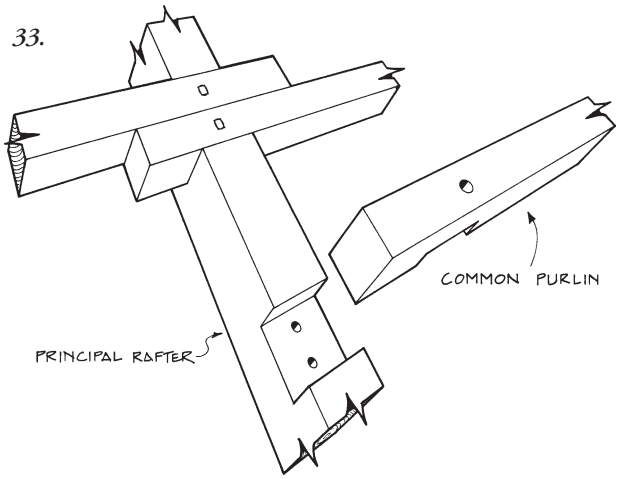

Figs. 33 and 34. Above (33), many buildings have the purlins staggered to avoid scarfing. Here, purlin relish beyond the halving augments the pinned connection and ties the roof longitudinally. Below (34), purlins may be skived (scarfed) in line and secured with a pin.

34.

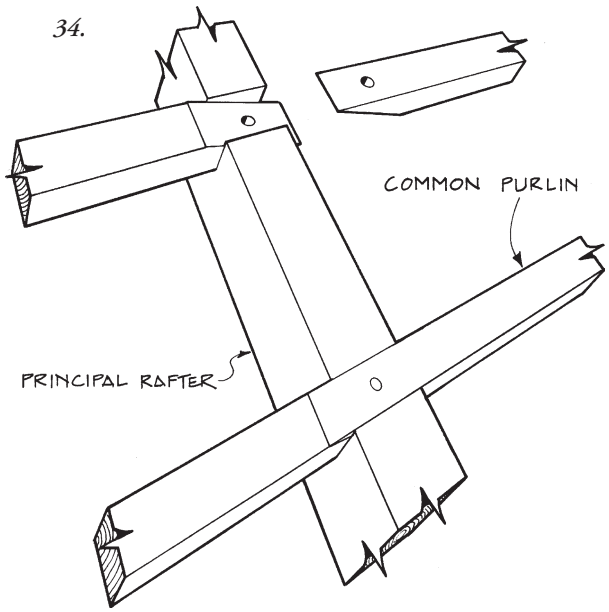

OTHER ROOF JOINERY. Lean-to additions are common on old structures, some built simultaneously with the main frame. By lessening the pitch of the lean-to roof, to produce a *broken back* roof, the rafter connections are simplified. The lean-to rafter can bear on the plate or on top of the main roof rafters (Figs. 36-38).

The Dutch and Germanic barns built in New York and New Jersey often had *pentice* roofs over the main doors at each end and occasionally over the smaller side-aisle doors. Various techniques were used to support such a roof. In the simplest design, triangular blocks 1½ to 2 in. thick were nailed onto the sides of the studs over the doorway and supported board sheathing (tenoned variant, Fig. 39). In other designs, joists spanning the end bays cantilevered over or through the gable anchorbeam to support a plate and rafters (Fig. 40). These 2-ft. to 3-ft. pentice roofs protected the doors and sills below from the weather.

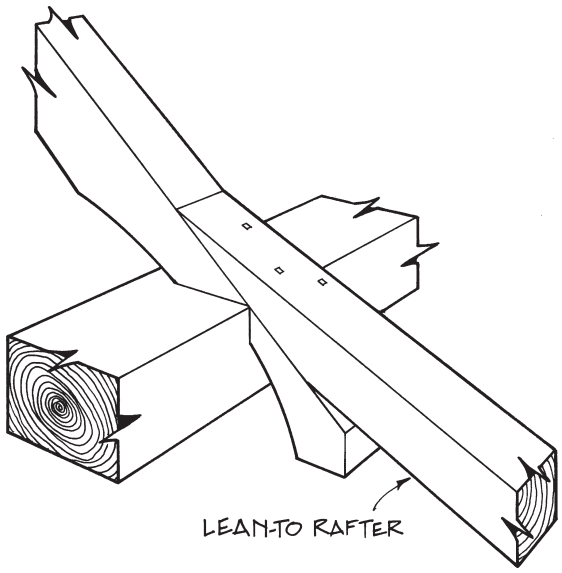

Fig. 36. Dutch houses often had "broken back" lean-tos, where the lean-to pitch was lower than the main roof pitch. A simple, effective solution was to bear the lean-to rafter on the back of the main rafter and secure the connection with a pin or nails.

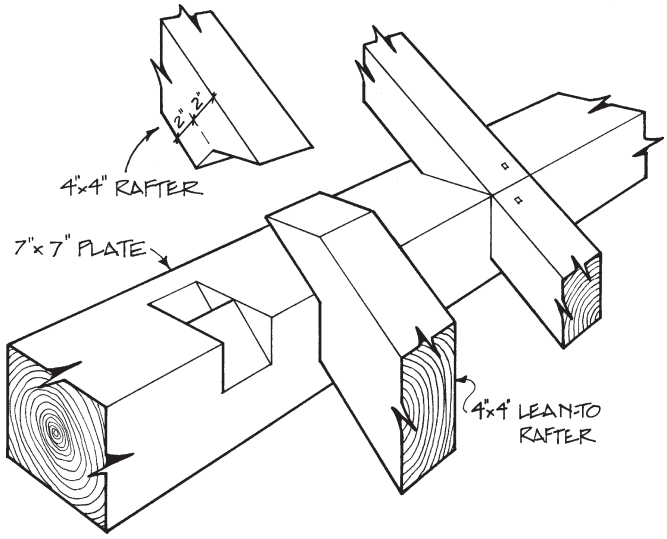

Fig. 37. In this early 19th-century Pittsfield, Massachusetts, house, the lean-to pitch matches the main roof pitch and the rafters are beveled in the step-lap seat.

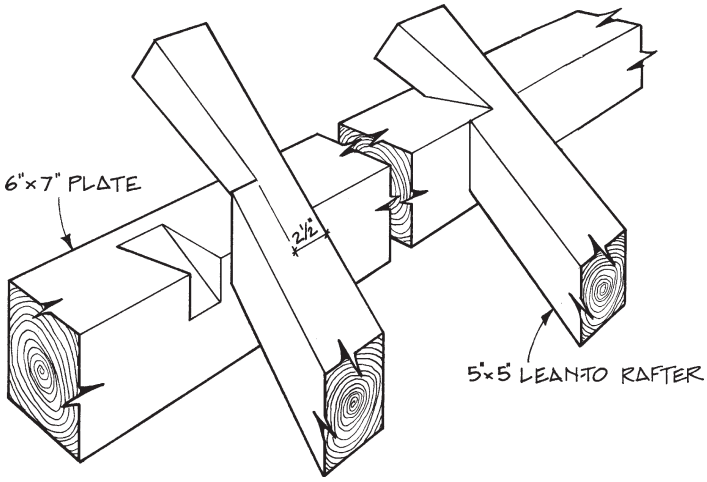

Fig. 38. In this ingenious and singular example from a barn in Seekonk, Massachusetts, the lean-to rafter is half-dovetailed in both width and thickness to lock into the main plate.

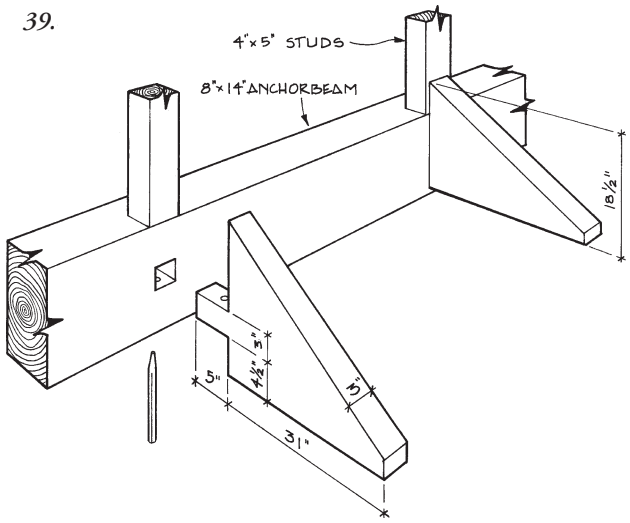

Figs. 39 and 40. Above (39), many end anchorbeams have telltale mortises, but only one example of this type has been found with all pentice parts intact, on a 44x45 barn that originally stood in Berne, N.Y. Though the 3x3 tenon 5 in. long would seem undersized, it worked for over 200 years. Below (40), many Dutch barns had cantilevered pentice arms (or outriggers) mortised full-size through the gable anchorbeam. Four or five of these supported the pentice plate and rafters.

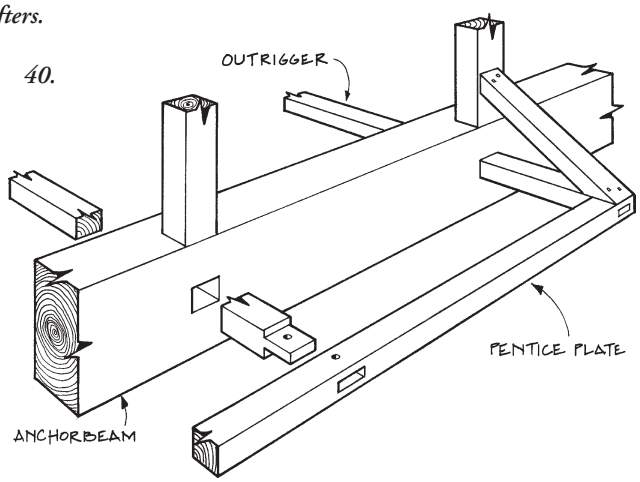

Cantilevered pentice arms run over the end anchorbeam of this Dutch barn formerly in Middleburgh, New York, and support the pentice plate with blind tenons. Rafters are butted and nailed as in Fig. 40.

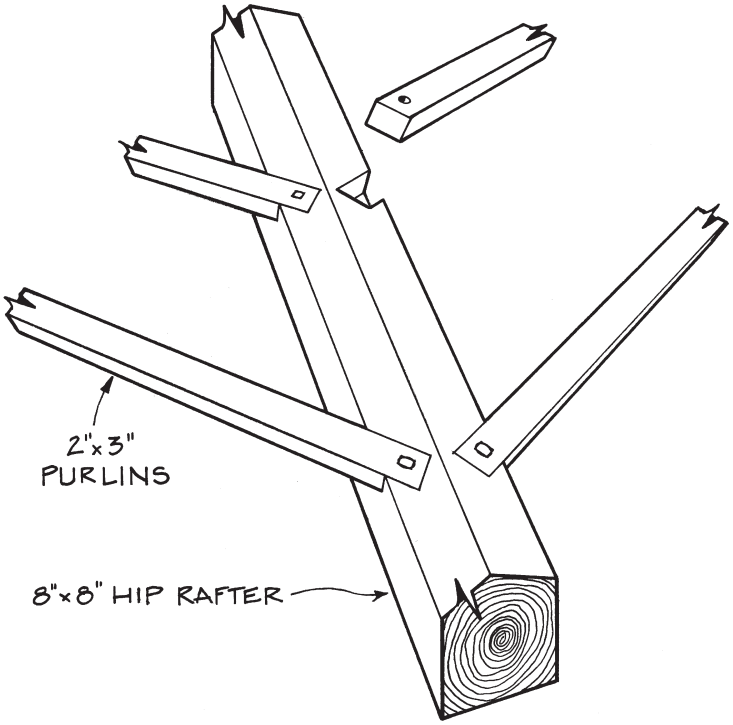

Special-case configuration of common purlins in an 18th-century hipped-roof meetinghouse, Pownal, Vermont.

Unusual European-style rafter foot found in a stone barn in Oley (Berks County), Pennsylvania. Rafters are seated in short beams notched over the plate, and forged straps secure the connection.

Greg Huber

Principal rafter-common purlin roof frame over the ell of an 1840s house in Windsor, Massachusetts, now dismantled. Purlins are continuous over two bays at each end; central bay purlins are staggered on rafters for sufficient bearing at the connections. (Something went awry at the second rafter from the far end.) Instead of ridge purlins or a continuous ridge beam, purlin-runs closely flank the ridge, leaving rafter joints undisturbed at the peak.

Dutch barn in Root, New York, measuring 47 x 45 ft., with 7x7 rafters birdsmouthed to an 8x8 plate. Two of the rafters show sprockets added after the fact to support an overhang.

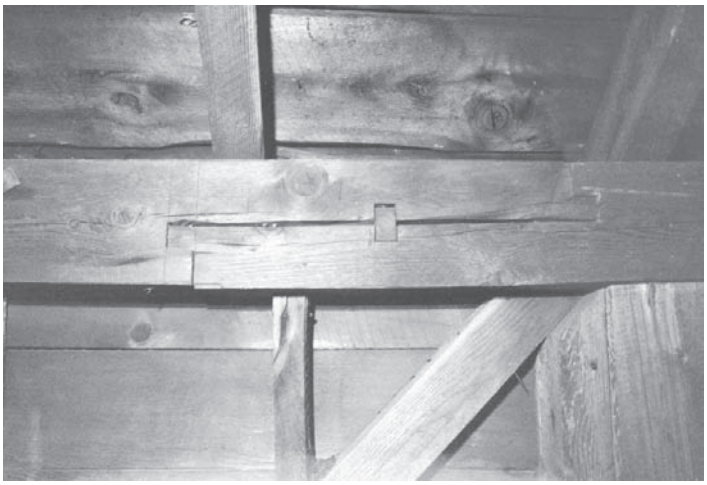

Bladed scarf with stub tenons in Becket, Massachusetts, after 1860. Some tensile capacity is provided by the small key.

Paul Oatman

Simple halved and bolted scarf ca. 1900 near Pullman, Washington.

VI. Scarf Joints

WE are often amazed at the lengths of timbers found in old American structures. Plates 40 ft. long are common. Fifty-footers are encountered occasionally, and timbers 60 and 70 ft. long are not unheard of. In the great old-growth forests that once stood on this continent, trees of sufficient straightness and height were in abundance. The older structures in a given area reflect the original forest. Unbroken straight timbers run the length of the structure. For example, in a typical 18th-century New York State Dutch barn measuring 50x50, there would be 13 timbers 50 ft. long. Such timbers were obviously not difficult to procure from the original forest.

However, as the original forest was replaced by second-growth forest, and sawmills, especially those with the new, faster circular saws, replaced hewers and the relatively slow up-and-down mills, it became more economical to join or *scarf* timbers together to make the necessary long sills, plates and purlin plates. Scarfing had been common practice in Europe for several hundred years, where the original forest was long gone.

STRUCTURAL CONSIDERATIONS. Two timbers joined end to end cannot match the strength and stiffness of a single member of the same dimensions. Some ingenious scarfs have been devised that aim to do so, but the majority of joints are fairly simple, and they are limited in the forces they can resist. Scarf joints can be subjected to a number of forces.

Axial Compression. This force, acting parallel to the grain of the member and along its axis, is perhaps the easiest to resist. A simple butt joint will work. A scarfed post would sustain axial compression.

Axial Tension. Plates and tie beams must resist moderate tension. Some truss components, such as lower chords, are subject to heavy tension loading. Tension-resisting scarfs are typically longer and more complex than others.

Shear. Rarely a concern in solid members, this force becomes a consideration when timbers are notched, as in scarf joinery. A shear force develops when one side of a scarf, for example the lower part of a simple half-lap, supports the other side. Shear forces cause splitting at the notches. Splayed scarfs, which taper to produce greater depth of material under the notches, generally handle shear forces better than halved ones.

Torsion (Twisting). Scarf joints are typically subjected to only minor torsion loads. Spiral grain in an unseasoned member causes twisting as it dries. A scarf joint that is not capable of resisting twisting will open up as the timbers season. As its abutments disengage, its ability to resist other forces will be diminished.

Bending. This is the most difficult force for a scarf to resist. Members subject to bending would include plates, tie beams and spanning beams supporting floor or roof loads. Sometimes a member must resist bending from two directions. A plate, for instance, is subjected to bending in the horizontal plane from wind loads and bending in the vertical plane from the roof load. The conscientious builder locates the scarf where bending forces are low.

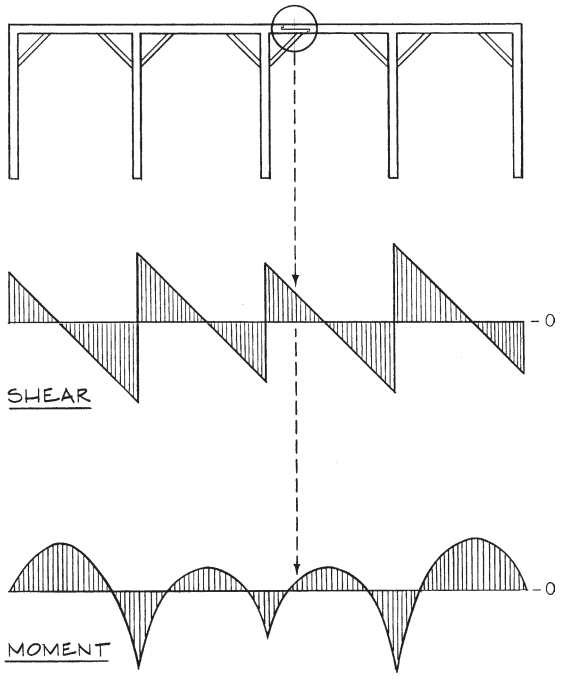

Fig. 1. Elevation of a plate continuous over five posts, showing a typical scarf location. Diagrams show resultant shear and moment values, both positive and negative, with horizontal line at zero force.

A member such as a plate or purlin plate that continues over multiple supports is much stiffer and stronger than one spanning between only two supports. The locations of the maximum and minimum moment (bending) forces are different in the continuous member. In a simple spanning member, the greatest moment occurs in the center of the span. In a continuous member, it occurs over the posts (Fig. 1, facing page).

Since it is difficult to create a scarf that handles bending forces as well as a solid timber, it makes sense to locate the scarf at a point where moment is the lowest. That is precisely where the majority of scarfs are located in old buildings. As in the illustration, the joint, additionally supported by the brace, is located where both shear and moment are low. Locating the scarf over the post, where stresses are at their maximum, would cause the plate to act like simple spanning members. Thus the plate would require a larger cross-section. Scarf location is also affected by available timber lengths and by the raising sequence of a building.

SCARF TYPES. In simplest terms, there are three classes of scarf: halved, splayed, and bridled. A halved scarf is a lap whose surfaces are parallel with the timber's. A splayed scarf has the lapped surfaces sloping. (A bladed scarf adds tenons.) A bridled scarf takes the form of a tongue and fork or open mortise and tenon. Counting variations and combinations, I have found 23 different scarfs. Period builder's guides illustrate at least another ten that are likely to be found in a structure somewhere. Examples illustrated here show the common orientation found in old structures. Some examples are also turned on edge. These will be noted.

Halved Scarf. A basic halved scarf or half-lap (Fig. 2) is probably the simplest to fashion and thus the most abundant. It performs well in axial compression but depends solely on pins or bolts to resist tension and torsion. It has moderate shear strength but little bending strength. It is often found where it receives continuous support, as in a sill, or where the carpentry is of the quickly executed variety, and many such joints open up over time. The half-lap is also commonly used in repairs made to buildings *in situ*.

Halved and Undersquinted. To improve bending strength and resistance to seasoning twist, the ends of a scarf can be undersquinted (Fig. 3, below left). The angle most often encountered for the squint is 1 in 2. Shallower angles are more time consuming to cut and increase the likelihood of splitting at the notch. This joint is only slightly more work than the unsquinted version, but a considerable improvement. Pins are essential to the joint's effectiveness.

Halved and Bladed. This common scarf is found in all periods and locales. Though most often used as depicted in Fig. 4, in early Massachusetts Bay frames it is frequently found on edge. The barefaced tenons or blades prevent twisting and improve bending and tensile strength. Some builders added extra pins in the central lapped portion. Overall length is commonly four times the depth of the timber. Variations of this scarf may present stub tenons without pins or a shortened lapped portion. In one variation, the topmost and bottommost cuts are aligned vertically and the tenons lengthened (see Cummings, Fig. 86 and Hewett, Fig. 271). Tenons are typically 1½ in. or 2 in. thick, and 4 in. or 6 in. long.

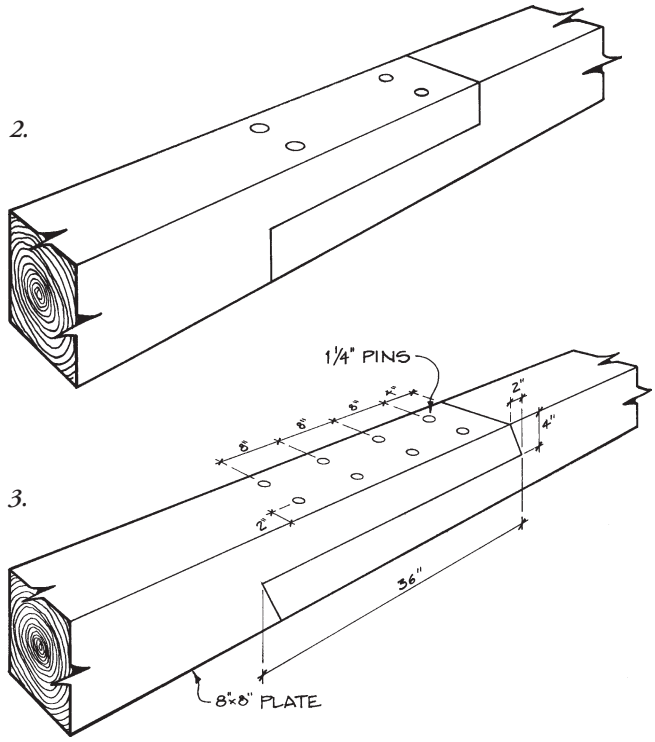

Figs. 2 and 3. At top (2), halved scarf with four pins. Above (3), halved and undersquinted scarf found in an early-19th-century barn in Monterey, Massachusetts. The barn's only scarf, perhaps necessitated by an oversight in timber procurement, it has held up well despite its center-of-span location. Note 1-in-2 angle of squint.

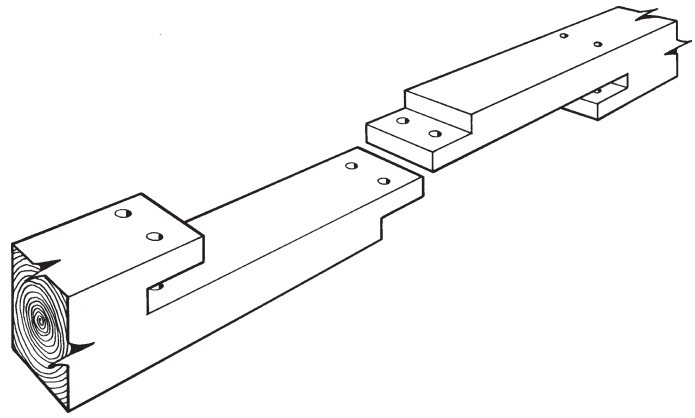

Fig. 4. Halved and bladed scarf with pinned tenons. Pins are often fitted additionally or alternatively in the central lapped portion.

Halved, Bladed and Cogged. In this unusual scarf (only one historic example found, though modern ones exist), a cog is provided in the T-shaped stub tenon (Fig. 5). This helps align the scarf and increases its bending strength against horizontal loads (such as rafter thrust), while adding some cutting time.

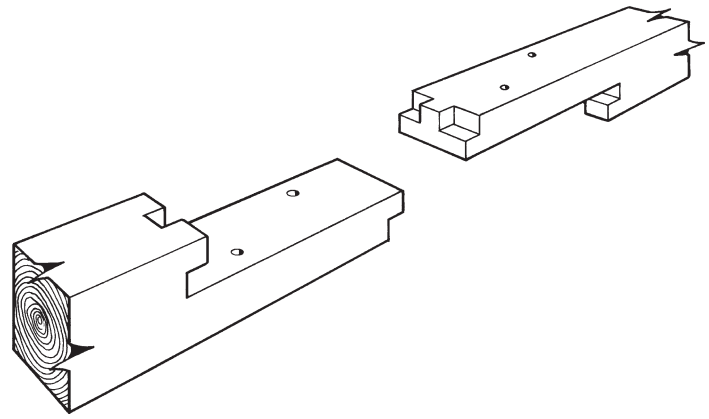

Fig. 5. Halved, bladed and cogged scarf found in a barn along the Mohawk River in New York State. Drawn from memory.

Halved and Tabled. With its center "table," this joint (Fig. 6) adds tensile capacity to the basic half-lap. An iron bolt prevents separation and displacement.

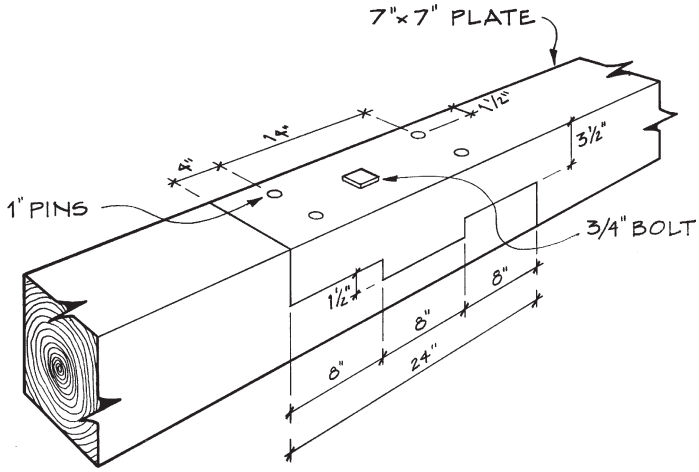

Fig. 6. Halved and tabled scarf in a 25x35 three-bay 1860s barn in Windsor, Massachusetts. This simple, effective joint relies on one bolt to keep it together.

Splayed and Stop-Splayed. In its most basic form, this scarf is simply a pair of complementary straight sloping cuts secured to each other with pins, nails or bolts. Nicknamed the *whistle cut*, it works wonderfully in shear but relies upon fasteners for resisting axial loads and twisting. In its more common form, the sloped, lapped portion is stopped before it feathers out to nothing (Fig. 7). Compared with the half-lap, shear strength is vastly improved by the sloped surface. The square abutments, typically 1½ in. or 2 in., resist axial compression. Pins provide tensile and torsion resistance.

Fig. 7. Stop-splayed scarf with square butts and four pins.

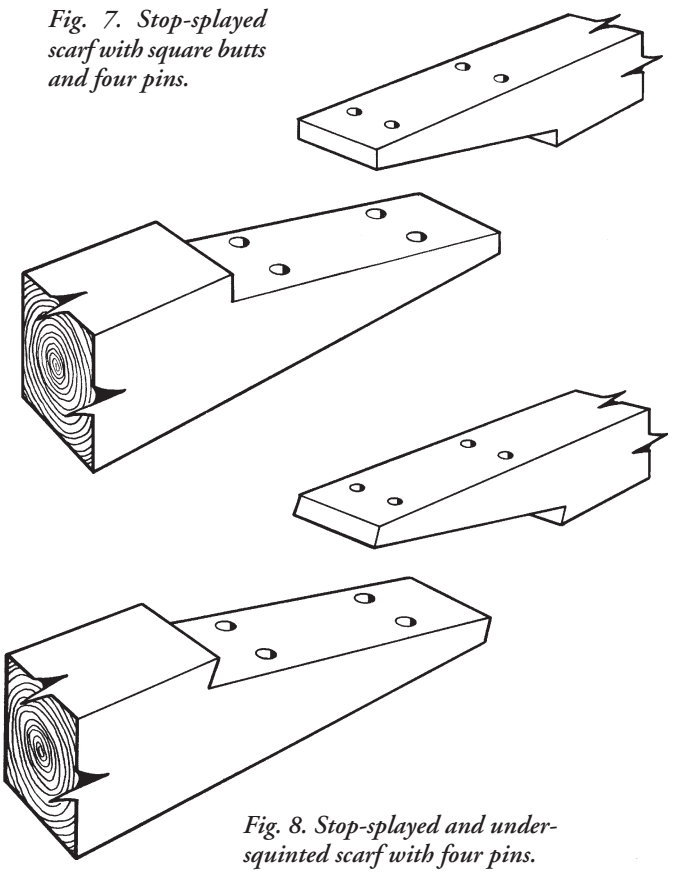

Fig. 8. Stop-splayed and undersquinted scarf with four pins.

Stop-Splayed and Undersquinted. Again by undersquinting the butts, the stop-splayed scarf (Fig. 8) is made more resistant to twisting. This scarf performs well, considering its ease of cutting.

Stop-Splayed Scissors. While based on the stop-splayed and undersquinted scarf, this variation is much stronger (Fig. 9). However, it is disproportionately more time consuming to fabricate, which accounts for its rarity.

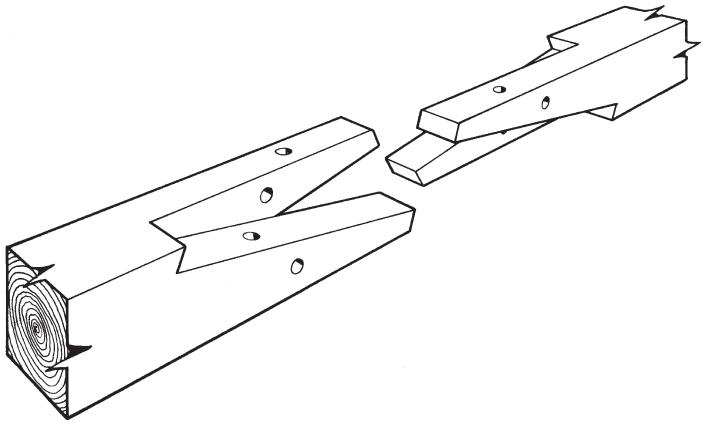

Fig. 9. Stop-splayed scissors scarf with two pins in each direction. The only known example is a 1927 repair to a house in Nantucket, Mass.

Stop-Splayed, Undersquinted and Cogged. Adding a cog to the stop-splayed and undersquinted scarf improves its bending strength in the secondary direction (Fig. 10). Only one example has been found of this type.

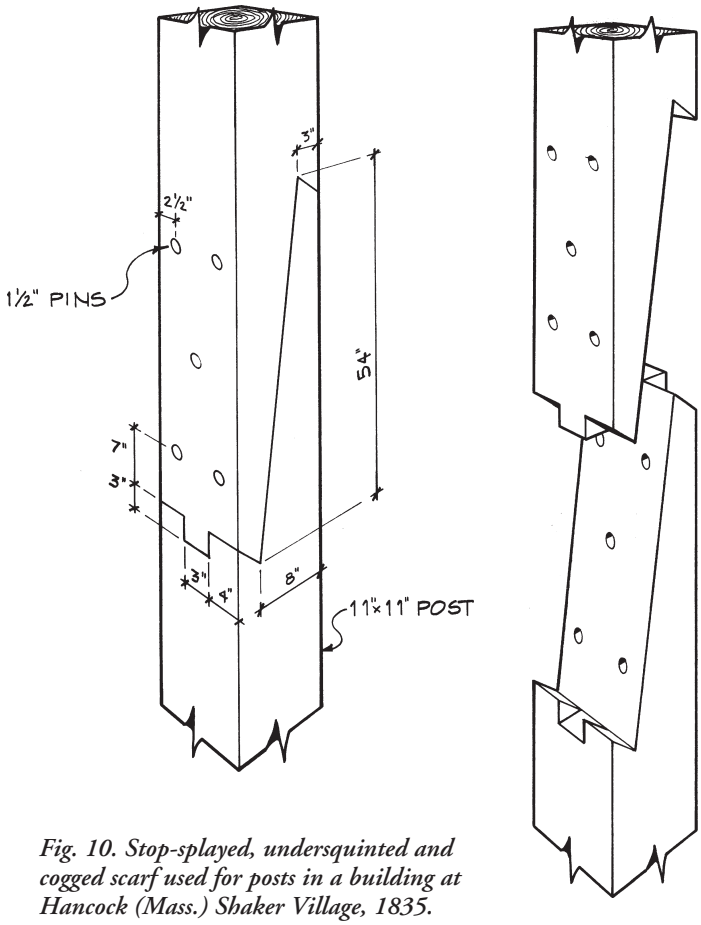

Fig. 10. Stop-splayed, undersquinted and cogged scarf used for posts in a building at Hancock (Mass.) Shaker Village, 1835. Apparently original, these joints are still tight. Note squint angle of 1 to 1.

Stop-Splayed, Undersquinted and Tabled with Wedges and Pins. A very strong scarf results when tabling and wedges are added (Fig. 11). The tensile capacity, torsion, and bending strength in both directions are greatly increased. The pins position the halves while the opposing wedges are driven and increase the joint's overall performance. The wedge thickness and the depth at the butts are usually the same, typically 1½ or 2 in. The butts need not be undersquinted. An example found at Jack's Valley, Nevada, has square butts, and bolts hold the scarf together.

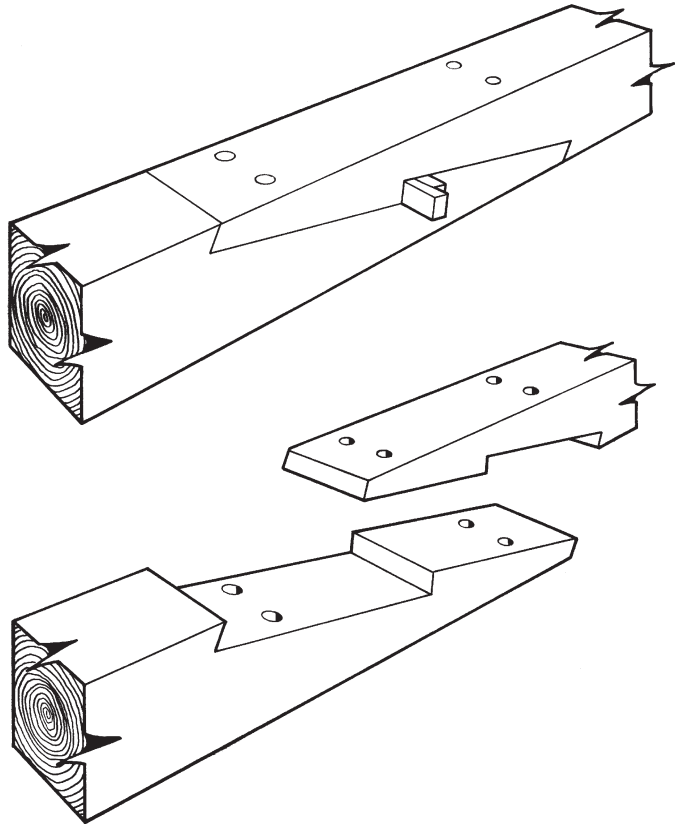

Fig. 11. Assembled and exploded views of stop-splayed, undersquinted and wedged scarf with four pins. Opposing wedges pre-stress the joint.

Stop-Splayed with Wedges and Multiple Tables. By drawing out the scarf, additional tables can be added to increase tensile capacity (Fig. 12). The complexity of this scarf precludes its use except in members under great tensile loads, as in the lower chords of long-span trusses.

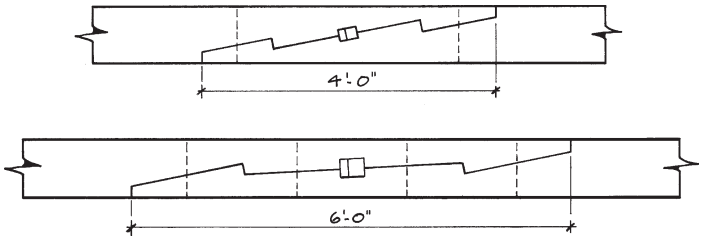

Fig. 12. Examples of the stop-splayed scarf with wedges and multiple tables, both taken from lower chords of trusses. The 4-ft. scarf was found on a late-19th-century building 40 ft. wide in Clayton, N. Y. The 6-ft. scarf was used in a ca.-1882 locomotive shop in Jamaica, N.Y., 64 ft. wide and 520 ft. long, and cut from 7½ x 9½ hard pine timber. Both scarfs use 1-in. bolts to keep the multiple bearing surfaces engaged. Both are designed for high tension loads.

Stop-Splayed and Bladed. By combining the bladed form with the splayed, the capacity of each is improved (Fig. 13). The tenons can be stub or long enough to be pinned. Compare Fig. 4.

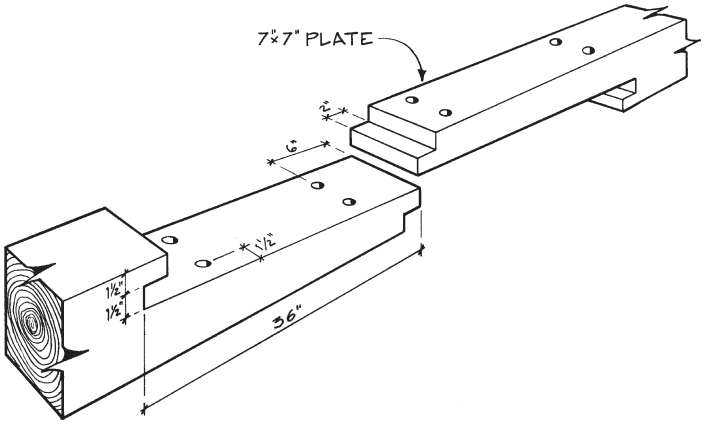

Fig. 13. Stop-splayed and bladed scarf in a late-19th-century 40x48 barn in Windsor, Massachusetts, with stub tenons and four 1-in.-dia. turned pins. The slope of the splay is only 1 in 36.

Bridled. The simplest bridled joint is a tongue and fork or open mortise and tenon (Fig. 14). Though it doesn't handle loads other than axial particularly well, it still has advantages. Because it is typically fairly short, it uses less timber and can fit better between other joints. It is commonly found in ridge beam splices where the close spacing of the rafter mortises leaves little room for a conventional scarf.

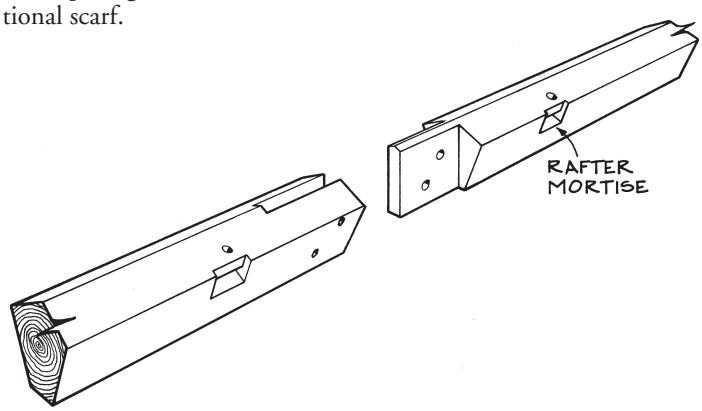

Fig. 14. Typical bridled scarf in a ridge beam. This short scarf works well where it receives frequent support from the rafters and must fit in the relatively short space between them.

Bridled and Squinted. The joint is improved by making the tenon blind on one edge and angling the abutment (Fig. 15). This

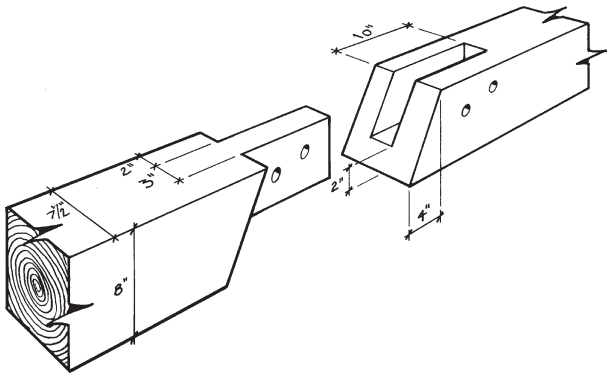

Fig. 15. Bridled and squinted scarf used (or reused) in the tie beams of the Harlow Old Fort House, Plymouth, Mass., ca. 1677.

joint is also found where the abutment slopes the opposite way (see Cummings, Fig. 87), and in that form occurs in one of the oldest timber-framed buildings in England, as a sill scarf in the Barley Barn at Cressing Temple, ca. 1200 (see Hewett, Fig. 273). The use of this particular joint in the roof of Harlow Old Fort House in Plymouth, Mass., is odd: the scarfs, which do not perform well in bending, are located about 4 ft. from the ends of 27-ft. tie beams. But tradition says the house was framed of timbers taken from the original fort in the settlement, hence the scarfs.

Tapered Bridle. This bridled scarf (Fig. 16), set flatwise, improves the shear capacity of the scarf. While it resists compression, moderate tension, and torsion, it is limited to locations where bending forces are minimal.

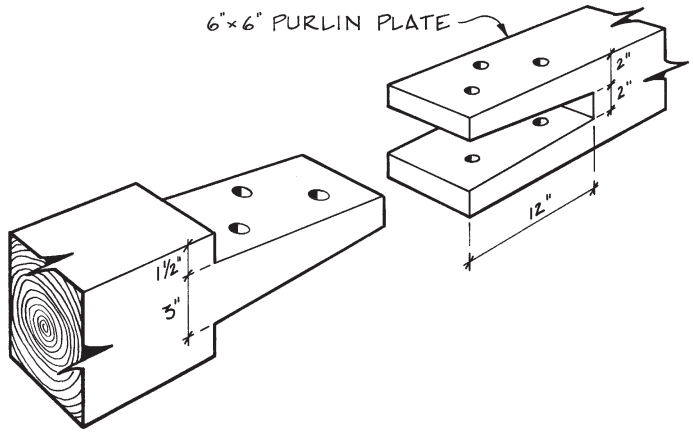

Fig. 16. Tapered bridle scarf in the purlin plates of a barn in Holliston, Massachusetts.

Tabled and Bridled with Key. Lengthening the bridle to provide a table and key improves the tensile and bending performance of the scarf (Fig. 17). Its rarity seems to indicate that the extra strength is not sufficient to warrant the extra cutting work.

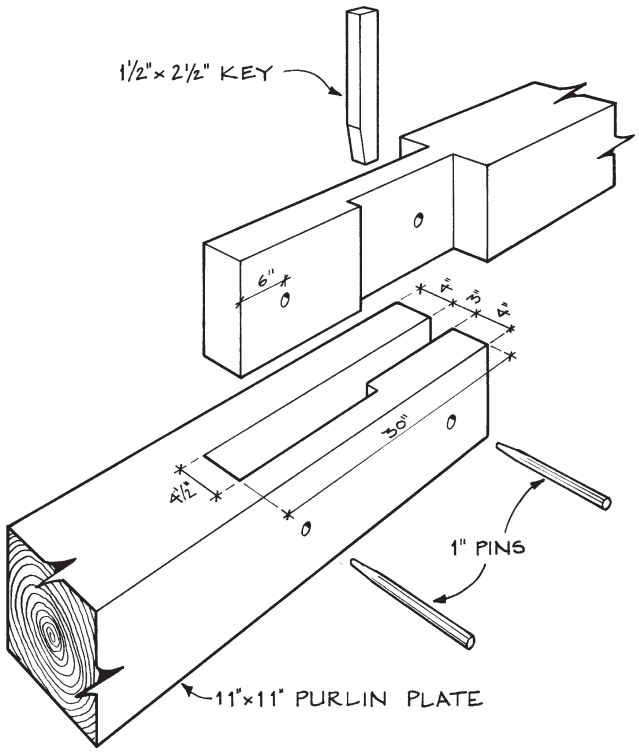

Fig. 17. Tabled and bridled scarf with key, 5-bay barn 62x81, Genoa, Nevada, ca. 1858.

Stop-Bridled Halving. Only one example of this type (Fig. 18) has been located. Though it works moderately well in most conditions, weakness in bending limits its applications.

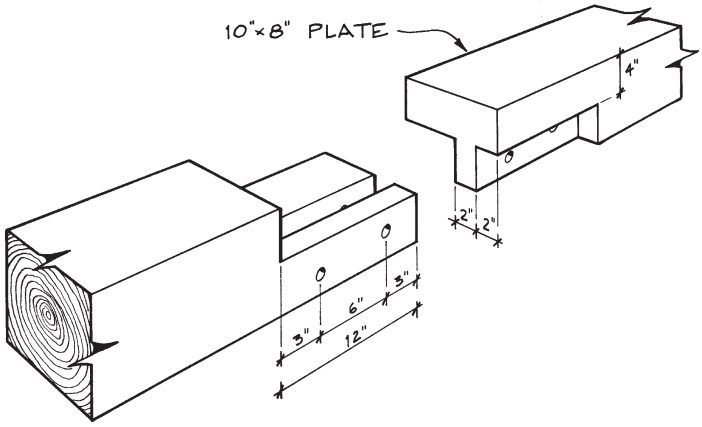

Fig. 18. Stop-bridled halving in a German barn, Myerstown, Pa. Located a very short distance from a post, it carried mostly shear.

Halved and Bridled. This not uncommon form (Fig. 19) works moderately well in all ways and yet is straightforward to fabricate and assemble. Undoubtedly there are splayed varieties of this scarf as well.

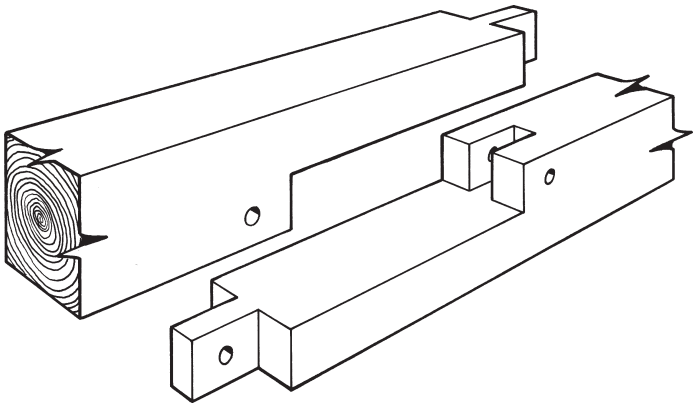

Fig. 19. A typical halved and bridled scarf. Additional pins may secure the lap.

Bridled Repair Techniques. When early carpenters encountered posts with decayed bottoms, the simplest way to replace a short section of damaged wood was with the bridle. In this position, the joint was subjected to primarily axial compression. This short, easy-to-fabricate joint (Fig. 20, facing page), was more than adequate. If only the tenon was decayed, it could be replaced with a *free tenon* (Fig. 20), also called a slip tenon or faux tenon. The use of a free tenon also permitted members tenoned at both ends to be inserted into an already erect frame. In a few cases where a carpenter mistakenly cut a timber off at the shoulder rather than the end of the tenon, a free tenon allowed the piece to be saved.

METHODS FOR JOINING STRUCTURES. Often enough, early builders added to existing structures or moved an existing structure and attached it to another. The frames needed to be anchored to each other to prevent displacement at the roof, walls and floors.

If both frames could stand independently of each other, then a simple free tenon was used to join adjacent posts (Fig. 21). The

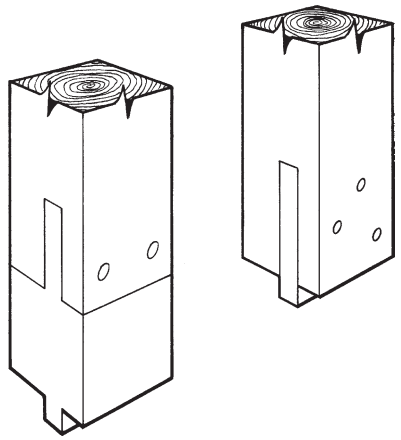

20.

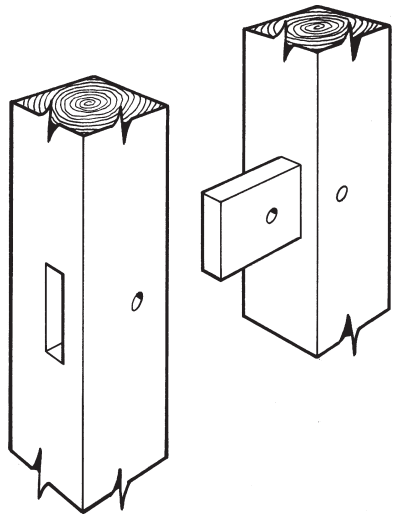

21.

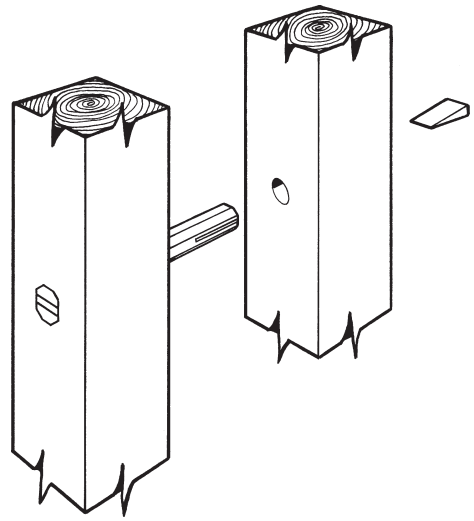

22.

Figs. 20-22. At top (20), post-bottom repairs: bridled scarf on left, free tenon on right. Middle (21), free tenon joins posts of adjacent frames. Above (22), stout pin kerfed and end-wedged does the same.

mortises were typically cut right through for convenience during assembly, and the tenons were secured by a single pin in each mortise. A simpler way to accomplish the same end was to bore 1½- or 2-in. through-holes at posts, ties and rafters, and drive large pins (Fig. 22). The pins were secured by kerfing and wedging their ends. Flaring the end of the pin acted as a sort of dovetail to hold the timbers tightly together.

When the builder added to this barn in Savoy, Mass., he saved on a new 30-ft. tie beam by framing a piece into the post and pinning and nailing it to the existing barn's tie beam. Sheathing remains in place below tie beam; shallow wedge for dovetail tenon emerges on surface.

A free tenon in the bottom of a post in this house in Windsor, Mass., may be a repair or a fix for a mistake. Shadows are cast by joists above.

This strange arrangement in a barn in Rochester, Vermont, uses the post-top tenon as a sort of free tenon to join the plates, though pins are invisible. The builder must have realized the inherent weakness of the connection and added the fish plate on top, secured with two pins.

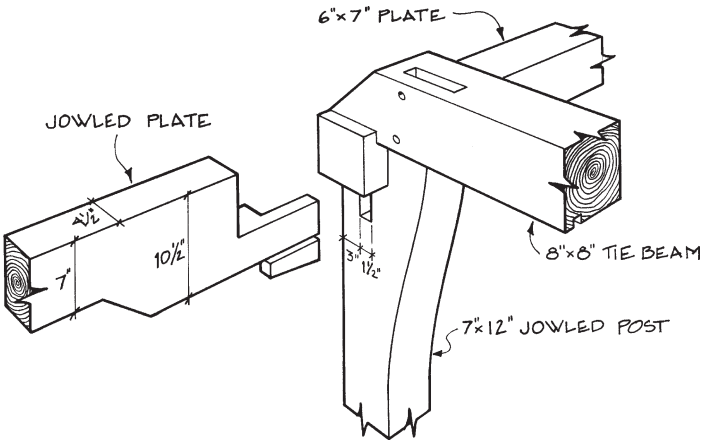

Fig. 23. Jowled plate of an early-18th-century addition to a barn in Seekonk, Mass. The mortise, offset in the post to avoid undercutting the post-to-plate tenon (hidden from view), was lengthened to allow easy insertion of the new plate tenon. The latter then was wedged up tightly under the existing plate. No pin was used.

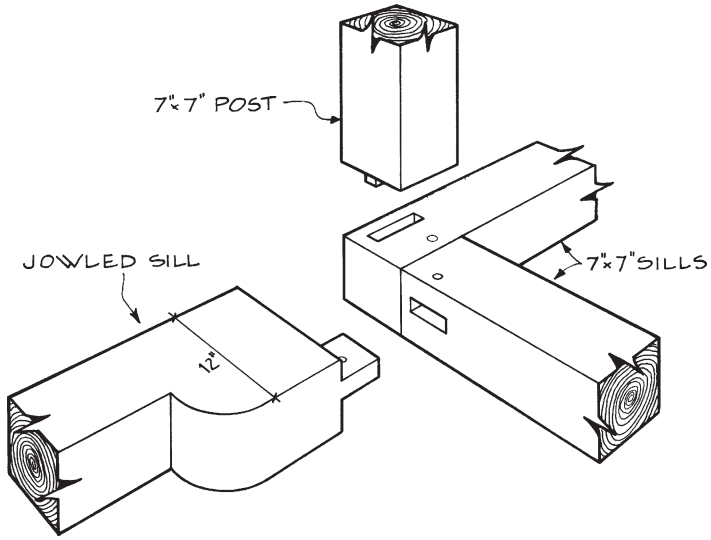

Fig. 24. In the same barn, the sill was similarly jowled but also pinned.

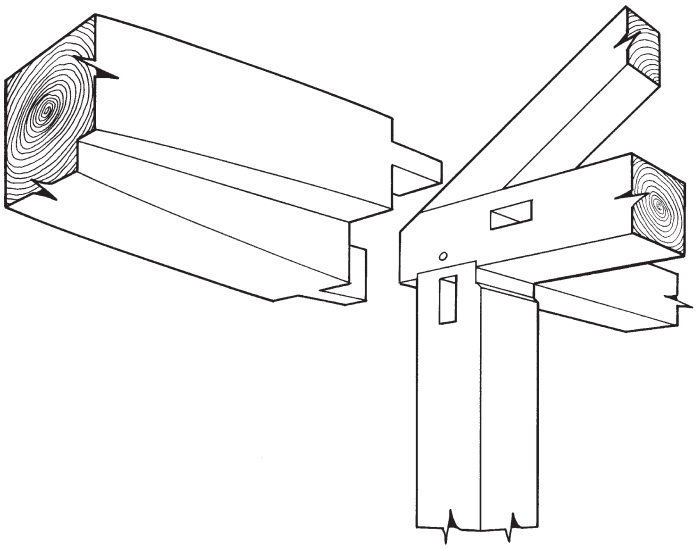

Fig. 25. A 9x9 plate, jowled in both directions to measure 12x13, joined a 16x42 carriage shed (1820-1860), to a house in Rowe, Mass. Connections were unpinned and held in place by sheathing.

If the plates and sills of the addition could be attached to the existing frame, then the builder saved the major expense of cutting an additional cross-frame. However, scarfing onto the end of an existing plate or sill was cumbersome and might compromise the original frame. The best solution was to utilize jowled members to offset the connection to an adjacent member (Figs. 23-25). The flared butt of the tree was retained during hewing or sawing. These jowled sills, plates and purlin plates required only simple mortises in the existing timbers, easily cut in place. Ten buildings employing such jowled members have been found in Massachusetts, New York and Vermont, dating from the early 18th century to the middle of the 19th.

Jowled plate (one of six!) in a much-expanded 18th-century English-style barn, Huntington, Massachusetts.

Simple bridled scarf in wall plate of five-bay barn 40 x 60 in Littleton, Massachusetts, built 1850-1870. The 2-in. tenon, 12 in. long, is secured by three pins. The builder used the same joint in the purlin plates.

Paul Oatman

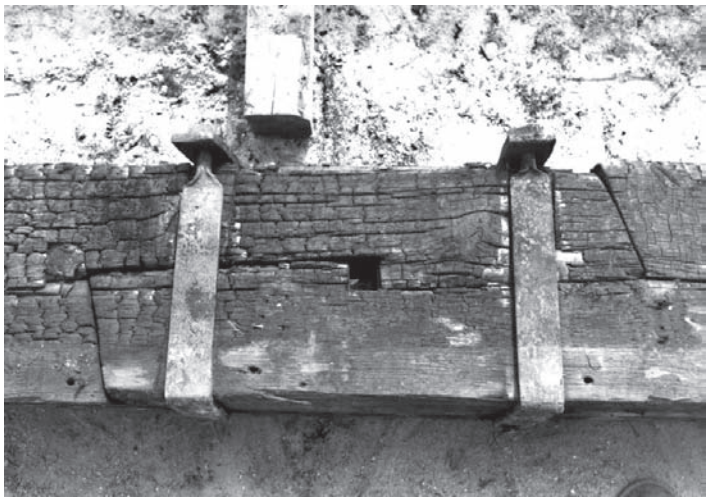

At top, bladed scarf with key, barn sill in Woodford, Calif. The sill is 8x8 Ponderosa pine, the scarf only 16 in. long. Top right, a bladed scarf used to repair a 7½ x 9½ post in a barn in Buskirk, N.Y. The tenons are 1 in. thick and 1 in. long, the scarf 23 in. long, with four pins. Above, a stop-splayed, undersquinted and tabled scarf with key used in a 6½ x 13 truss chord in the 1796 Cabildo in New Orleans (roof burned 1988, reconstructed 1992). There is barely a splay, and two forged iron straps still hold the joint together. At right, this unusual stop-splayed, undersquinted and tabled scarf in Pine Plains, New York, did not employ a key: the halves had to be slid together sideways.

BIBLIOGRAPHY

Brunskill, R.W. *Timber Building in Britain,* Victor Gollancz Ltd., London, 1985.

Charles, F.W.B. *Conservation of Timber Buildings,* Hutchinson, London, 1984.

Cummings, Abbott Lowell. *The Framed Houses of Massachusetts Bay, 1625-1725,* Harvard University Press, Cambridge, 1979.

Glassie, Henry. "Barn Building in Otsego County, New York," published in *Geoscience and Man,* Vol. 5, June 1974.

Graubner, Wolfram. *Encyclopedia of Wood Joints,* Taunton Press, Newtown, Conn., 1992.

Hewett, Cecil A. *English Historic Carpentry,* Phillimore & Co., London, 1980.

Kelly, J. Frederick. *Early Domestic Architecture of Connecticut,* Yale University Press, New Haven, 1924. Reprinted by Dover Publications, New York, 1964.

Newlands, James. *The Carpenter's Assistant,* Crescent Books, New York, 1990 (reprint of work originally published in the 1850s).

Sobon, Jack A. *Build a Classic Timber-Framed House,* Storey Communications, North Adams, Mass., 1994.