HISTORIC AMERICAN ROOF TRUSSES

V. The Evolution of Roof Trusses

THIS article is fifth and last in a series to discuss and illustrate the form, function, joinery and origins of historic American timber-framed roof trusses, showing typical examples with variations. Previous articles in the series have treated Scissor Trusses (TF 69), Queenpost Trusses (TF 71), Kingpost Trusses (TF 72) and Composite and Raised Bottom Chord Trusses (TF 74). A related anticipatory article, "The Close Spacing of Trusses," appeared in TF 67.

It is impossible for a native speaker to speak incorrectly.
—Benjamin Whorf

We must labor to be beautiful.
—W.B. Yeats

VERNACULAR ORIGINS. The truss form emerged from the timber framing methods of classical antiquity in the Mediterranean region and only during the last two centuries became shaped by engineering analysis and design. Truss construction has always been associated with the high end of vernacular carpentry; trusses are rarely found in private homes or barns, but almost always in prestigious public buildings such as temples or churches, or in bridges. While we have only a small body of evidence for the exact form of the trussed roofs of antiquity, we have abundant extant examples of long-span roof systems from the Middle Ages through the Renaissance. The variety of forms and the inventiveness of their framers seem without end. Many of these pre-modern roof frames are fully realized trusses with a captured kingpost hanging the middle of the tie beam, and the ends of the rafters restrained within the same tie (Fig. 1).

Multiple kingpost and queenpost examples exist in Switzerland in the work of the self-taught designers and builders Jakob, Johannes and Hans Ulrich Grubenmann. Their longitudinal roof truss in the Reformed Church at Grub (1752) and the Bridge on the Linth (1766) represent the culmination of an established central European tradition of *hängewerk*—that is, using posts in tension to suspend tie beams or truss bottom chords (Figs. 2 and 3).

Will Beemer

Fig. 1. St. Catherine's Church, Honfleur, Normandy, late 15th century.

Grubenmann-Sammlung Teufen, Switzerland, used by permission

Fig. 2. Lengthwise truss, Reformed Church at Grub, Switzerland, 1752.

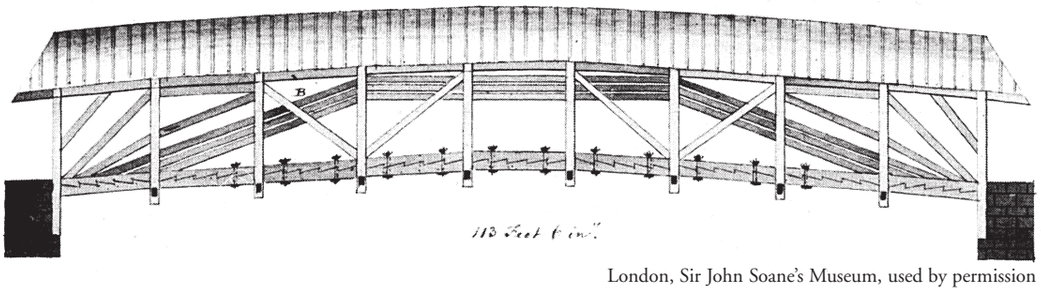

London, Sir John Soane's Museum, used by permission

Fig. 3. Bridge on the Linth at Ziegelbrücke, Switzerland, 1766, detail, after Cristoforo Dall'Acqua and Michael Shanahan, ca. 1792-3.

Other examples of these old, complex frames, with their indeterminate load paths and superfluous or only-occasionally functioning members, do not qualify as trusses in the modern sense of the term, but they certainly participate in the form. Their builders intended these constructions to span a greater distance than an unassisted beam could; they affixed the feet of rafters against outward thrust and limited bending stresses by correct positioning of timbers and their loads, achieving triangulation among the members; and their work has been remarkably successful and long-lived.

David Yeomans' excellent book *The Trussed Roof* (1992) suggests that what we today call the truss was not in use in England before its introduction from Italian sources in the 16th century. The relative absence of fully realized trusses in Cecil Hewett's compendious surveys *English Historic Carpentry* (1980) and *English Cathedral and Monastic Carpentry* (1985) reinforces this point. However, Hewett's illustration of the council chamber roof at the Tower of London has all the elements in place: a pendant kingpost with perpendicular joggling at the head, a tension joint at its foot suspending a cambered tie beam, and the principal rafters bearing neatly on the tie beam ends over the posts (Hewett 1980, 186). Hewett dates this roof frame to between 1370 and 1580. Additional elements in the frame, purlin posts that rise from the tie beams, are largely picked up by rising curved braces and thus don't participate in truss action. The Angel Choir high roof at Lincoln Cathedral (before 1280) is an example of a roof frame that doesn't look to us to be a truss but has all the listed characteristics (Fig. 4). Queenposts, hung on tenons and iron straps from a double-braced (and thus stiffened) collar beam, drop to support the longer tie beam below using a side-lapped dovetail and an iron U-strap (Hewett 1985, 32).

Metal reinforcement. With the possible exception of the bronze trusses in the portico of the Pantheon in Rome, which may have been bronze-clad timber (Mark, 203), ancient truss members were exclusively wooden for almost two millennia until experimentation with iron and steel roof frames began in the late 18th century. Early iron bridges such as the famous arch bridge at Coalbrookdale, Shropshire, designed by T.M. Pritchard in 1777, reflect their origins in timber design by using metal mortise and tenon and dovetail connections.

Metal was frequently if inconsistently incorporated into trusses as early as the Middle Ages, when wrought iron straps with forelock bolts were used to reinforce tension joinery such as the kingpost-to-bottom chord connection. The Grubenmanns' 18th-century Swiss bridges sometimes included iron counterbraces in the form of slender rods. In a striking example, the 1805 Central Moravian Church in Bethlehem, Pa., has long iron links, let in and bolted to the underside of the single-piece timber bottom chord, which join rising yokes at the ends to capture the thrust of the principal rafters (TF 74, 9).

A further use of metal found at both the Grubenmanns' Schaffhausen Bridge (1756-8) and Central Moravian Church is the placement of sheet iron between the butting members in compression joints, perhaps reflecting German influence in Pennsylvania. J.G.R. Andreae's 1776 description of the Schaffhausen Bridge reported "a piece of tin is put in the joint, to prevent the brace pressing or eating into the butting points" (Maggi and Navone, 217, and see also illustration TF 74, 8). Without a suggestion of any German connection, these sheet metal bearing pads also show up in the remote towns of Montgomery and Enosburg, Vermont, in the top chord butt joints of lattice truss bridges built by the Jewett brothers between 1860 and 1890. In the early 1830s, the long-span, low-pitched urban church roofs of the New York and New Orleans architect James H. Dakin were supported by multiple kingrod trusses, but still used timber for tie beams, braces and principal rafters (Dakin collection).

Wholesale replacement of wooden members with iron or steel beams had to wait for the 19th century. Published investigations into the strength of materials and quantitative analyses of frames began to appear. A history of these early experiments is given by Peter Barlow, the English mathematician and researcher, at the beginning of *An Essay on the Strength and Stress of Timber* (1824). The influence of these analyses on illustrations and discussions in builder's guides was partly responsible for the reduction of the profusion of inventive earlier forms to the relatively few, highly rationalized forms found in 18th- and 19th-century church attics in the New World. Gasparini and Provost remind us that "the concepts needed to analyze statically determinate trusses were defined largely in the 17th and 18th centuries . . . . Yet there appears to be no evidence that the principles of mechanics were applied to the rational design of trusses before the 19th century" (Gasparini and Provost, 21-22).

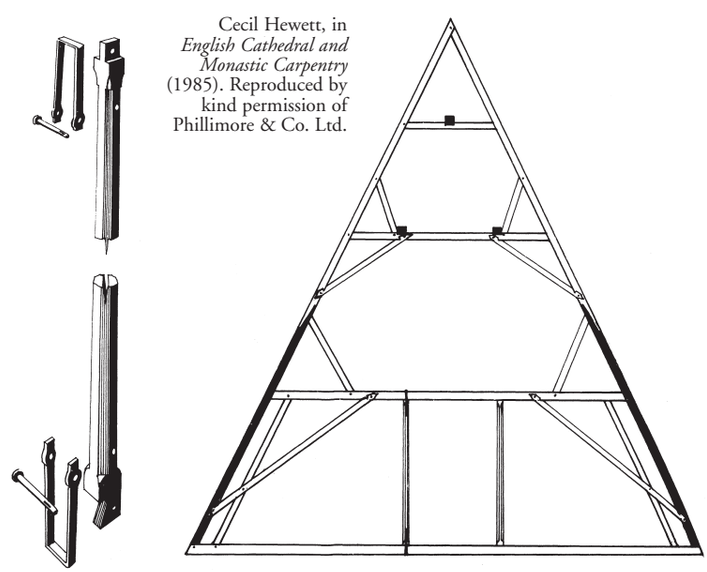

Cecil Hewett, in *English Cathedral and Monastic Carpentry* (1985). Reproduced by kind permission of Phillimore & Co. Ltd.

Fig. 4. Elevation and tension post detail of the Angel Choir high roof at Lincoln Cathedral, before 1280.

RATIONALIZATION AND EVOLUTION OF TRUSSES. An early example I have found of a practicing framer exploring quantitatively derived strength properties for wood is an undated note by John Johnson, a well-known framer of public buildings and bridges in northwestern Vermont and southern Quebec, active between 1794 and 1840, and Surveyor General of Vermont. Discussing the capacity of a bridge, Johnson wrote:

> An average of the experiments of Emerson and Barlow will give the adhesive strength of one of the posts at 297 tons, which is almost double to the weight of the whole bridge, whereas the weight of the bridge that can depend on one post cannot exceed 25 tons and will not reach near that amount. But allowing 25 tons it leaves for the bridge to sustain independent of itself 816 tons (John Johnson Papers).

Johnson, who was mathematically sophisticated and worked in decimal feet, has calculated the dead load of his bridge and, while allowing an extra amount for safety, figured how many of its tons the most heavily loaded post could carry, giving him as much as 25 tons per post. The remaining capacity of the posts, the 816 tons available for live loadings, he has determined by using experimentally derived strength values for wood expressed as pounds per square inch multiplied by the cross-sectional area of his posts. Although this fragment of Johnson's doesn't contain all his calculations and doesn't add up, we can explore it usefully.

"Adhesion" means tension, and the bridge weighs around 150 tons, likely for a large double-barreled Burr Arch of the sort Johnson built. His typical posts were 10x11 or 110 sq. inches in section, but for strength calculations he would probably use the cross-section between the joggles, likely 6x10 or 60 sq. in. Multiply this by the values in tension found in Barlow for fir or pine, somewhere between 7500 and 12,000 psi., similar to modern values, and you get about 300 tons of tensile capacity in each post.

How Johnson decides to ascribe 25 tons to each post, admitting it is much too high, is a mystery. Posts on bridges carry dramatically different loads depending upon their location in the truss, and Johnson knew this because he often varied his panel width cleverly to reflect it, and he was good at trigonometry. Somehow he arrives at this safe figure. Each post has only to bear 25 tons while the rest of its capacity, 272 tons per post, is available for live load.

But if the total load capacity of the bridge, 816 tons, is divided by 272 tons, we arrive at a puzzling bridge of but three posts. Possibly Johnson is discussing one of his big bridges composed of 56-ft. span kingpost trusses one after the other on piers. We have to accept that we don't know what this bridge looked like or how Johnson calculated anything other than the dead load and the tension capacity, but we do know he does so using internationally generated data, "the experiments of Emerson and Barlow."

Though Emerson's works do not survive, Peter Barlow called him the "standard" and included his values alongside his own in the latter's seminal work on the strength and stress of timber (Barlow, 3-4). Johnson probably owned a copy of the book or was shown one at the University of Vermont in Burlington, where he built many of the early large structures. Perhaps in the fragmentary quotation we see the tentative, first intersections of quantitative analysis with a craft-based tradition that sized wooden members according to practical experience and by visual proportioning to obtain the appearance of adequate strength. The intersection of craft tradition and quantitative analysis remains incompletely resolved 200 years later.

Truss Simplification. In addition to the spread of published truss designs influenced by experiment and analysis, in an increasingly scientific and materialistic intellectual culture in both Europe and America, a second influence on the simplification of truss design was the popularity of neoclassical architecture for large halls, particularly in the American post-Revolutionary period. This style's emphasis on open audience rooms instead of the aisled naves, dense with columns, of Gothic Europe demanded longer clear spans in even simple country churches. Some of the great variety of forms mentioned earlier performed successfully because their spans were modest, usually under 40 ft.

A third reason for truss design simplification was the availability in the New World of immense timber. The construction of powerful trusses with but a few members, correctly disposed, became economical and appealing. This form contrasted with the great church and cathedral roofs of the Middle Ages, whose frames were composed of a multiplicity of members of various lengths, some of them quite long but remarkably slender, such as 6x6 tie beams 35 ft. long or 5x5 principal rafters often even longer.

A final reason for simplification, perhaps related to the availability of large, long timber, was the explosion of long-span wood truss bridge construction and technology in North America in the late 18th century and throughout the 19th. The unprecedented clear spans, commonly exceeding 150 ft. and reaching as far as 360 ft., and the fact that many were designed for railroad traffic, took bridge truss construction out of the realm of vernacular experience and invention. Eventually these criteria generated a succession of trained or self-taught engineers producing patented designs—Burr, Johnson, Whipple, Haupt, Long, Howe—or, like Sganzin and Mahan, writing texts on civil engineering then used in new engineering curricula at American colleges such as West Point.

The same 19th-century builder's guides that illustrated church roof trusses (Tredgold, Shaw, Bell) began to include bridge truss designs and, unlike late 18th-century English works such as Price or Langley, included in their illustration plates none at all of the old complex roof systems. A. C. Smeaton, in *The Builder's Pocket Companion* (1852), advised that "systems of framing are most effective which are most simple," but lamented: "At present the designing of roofs is governed almost entirely by experience and no fixed laws can be appealed to" (Smeaton 67, 75). In his *General Theory of Bridge Construction* (1856), the American Herman Haupt, while praising the talents of the Grubenmanns, said of the famous Schaffhausen Bridge: "With many excellencies this bridge had also serious defects, and it is certain that a much smaller quantity of timber, judiciously arranged, would have far greater strength" (Haupt 145).

In rare cases, new truss types first applied in bridge design, particularly the Town Lattice truss, were introduced into the church roof systems of the early and mid-19th century. The Second Presbyterian Church (1835) of Madison, Indiana, has a plank lattice roof system as does the First Presbyterian Church (1832) of

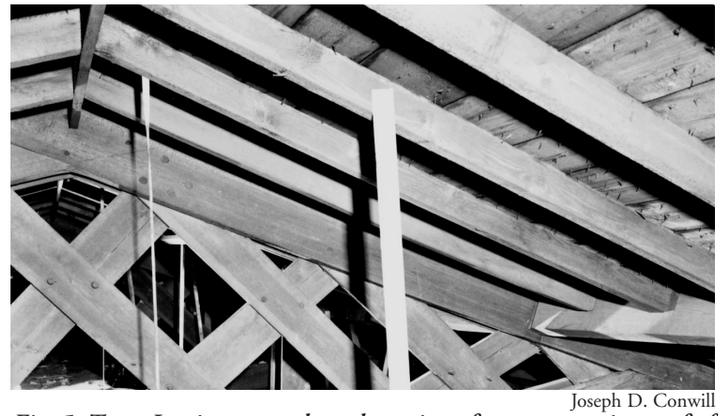

Joseph D. Conwill

Fig. 5. Town Lattice truss adapted to scissor form, supporting roof of First Presbyterian Church, Fayetteville, N. C., 1832. A rare instance.

Fayetteville, N.C. (Fig. 5 facing page). Other examples, some designed by Town's firm itself, exist in North Carolina, Alabama and New York City (Conwill, 6).

Variations. The rationalization of truss design to only a few good forms did not exclude extensive variations. Having examined several hundred sets of roof trusses in the eastern US, I have yet to see any that are exact copies of another or of a published plan in every detail. Church roof frames in the 18th and 19th centuries were still cut on site, usually by an experienced and confident local framer with a book in hand or a drawing by an architect, or working near some built examples that he had examined. Variations might arise from that framer's idea of good practice or from a church committee's order to copy the design of another nearby church, or occasionally from an architect's design, which sometimes included the truss configuration but rarely its joinery details.

At Woodstock, Vt., in 1836, an indenture between the Methodist-Episcopal Church trustees and a builder for the construction of a new timber-framed church specified three times in five pages that various parts of the work be carried out "as well as the Universalist Chapel is." The 1847 plans for the Brimfield, Mass., Congregational Church included a detailed truss drawing, perhaps because the form was modern, using iron queenrods rather than timber queenposts (TF 71, 14). Robert Smith's designs for raised bottom chord roof systems in and near Philadelphia also specified iron-reinforced joinery, probably because of the difficulty of making this truss form work (TF 73, 16). At Huntington, Vt., in 1872 the framer must have seen Benjamin's *Practical House Carpenter* (1830) but changed some of the joinery in a conservative or perhaps regional direction, preferring the older wedged half-dovetail at the foot of the kingpost to the inset bolt specified by Benjamin (TF 72, 24). Lee Nelson's study of post-to-chord tension joints in the trusses of the Delaware Valley in the 18th and 19th centuries finds stub tenons with U-straps or hanger bolts and no wedged dovetails, suggesting regional patterns (Nelson, 11-24).

Double-Raftered Trusses. The material requirements of timber construction, particularly finding room for the joinery in the cross-section of a member otherwise abundantly strong, when combined with any given framer's notion of the aesthetics of framing made all these 18th- and 19th-century trusses partly modern and partly ancient. The weakness of the relish of a mortise in double horizontal shear, the condition at the end of a tie beam that receives a rafter foot, led many framers to build double-raftered trusses with the inner, heavily loaded principal rafters bearing at their bottom ends a foot or two inside the support points on the tie beam—thus introducing bending (though apparently of an acceptable amount) into the tie beam—and at their top ends in secure joggles near the kingpost head. In some cases, the upper rafters of the set might not even bear at the kingpost head.

This form differs from typical American, English and Continental trusses with inboard single principal rafters carrying a superimposed deck of commons via principal purlins. Examples of the double-rafter form are myriad and in our survey include the meetinghouses at Lynnfield Center, Mass. (1714) and Strafford, Vt. (1799), the Congregational Church at Windham, Vt. (1800), the Central Moravian Church at Bethlehem, Pa. (1806) and the Sutton, Vt., Baptist Church (1832).

Double-raftered trusses existed in England and continental Europe at earlier dates as well. In Fig. 6, Hewett illustrates a relatively modern looking double-raftered kingpost truss in the high roof of the south transept of Lichfield Cathedral (1661-9), which he calls, along with the roofs over the rest of the church, "probably the best post-medieval roofs for a great church that exist in England" (Hewett 1985, 66).

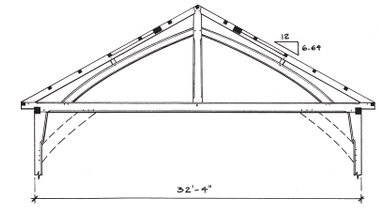

Lynnfield Center, 1714.

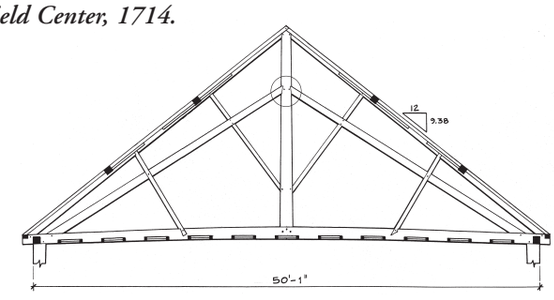

Strafford, 1799.

Jack A. Sobon

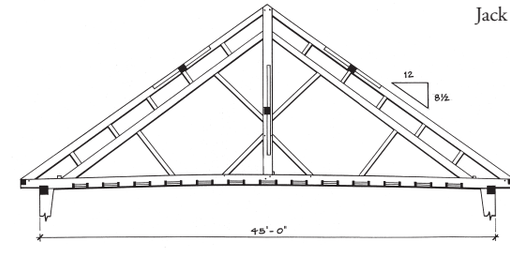

Windham, 1800.

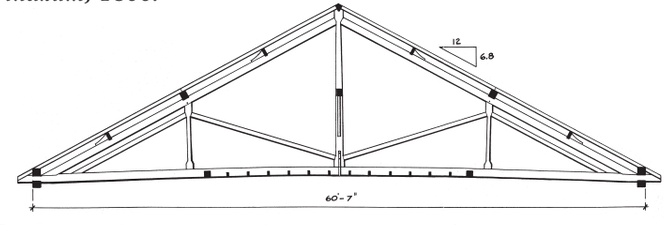

Castleton, 1833.

Fig. 5. Typology of American double-raftered trusses. Only Castleton carries a separate deck of rafters, European style.

Cecil Hewett, in *English Cathedral and Monastic Carpentry* (1985). Reproduced by kind permission of Phillimore & Co. Ltd.

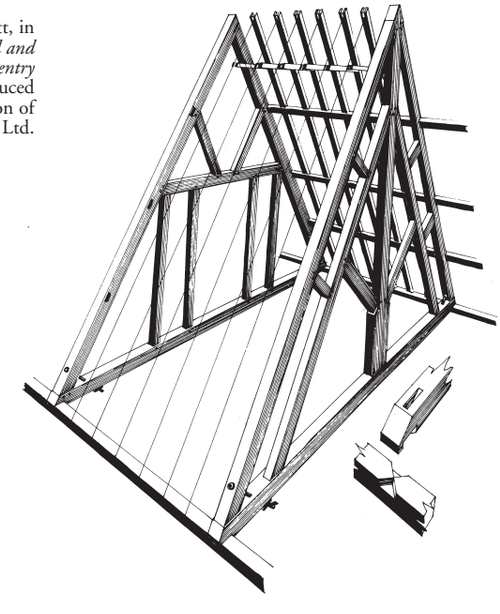

Fig. 6. Lichfield Cathedral, high roof of the south transept, repaired 1661-69 after the ravages of the English Civil War. Heavy forelock bolts reinforce rafter-to-tie joint where relish is short.

Patrick Hoffsummer et al. illustrate numerous medieval double-raftered examples including the Church of Notre-Dame at Étampes (1177-87) and the late 15th-century roof above the choir at the Cathedral of Notre-Dame in Reims (Figs. 7 and 8 below; Hoffsummer, 186 and 306).

France Saïe-Belaïsch, Centre de recherche sur les monuments historiques, Paris. Used by permission.

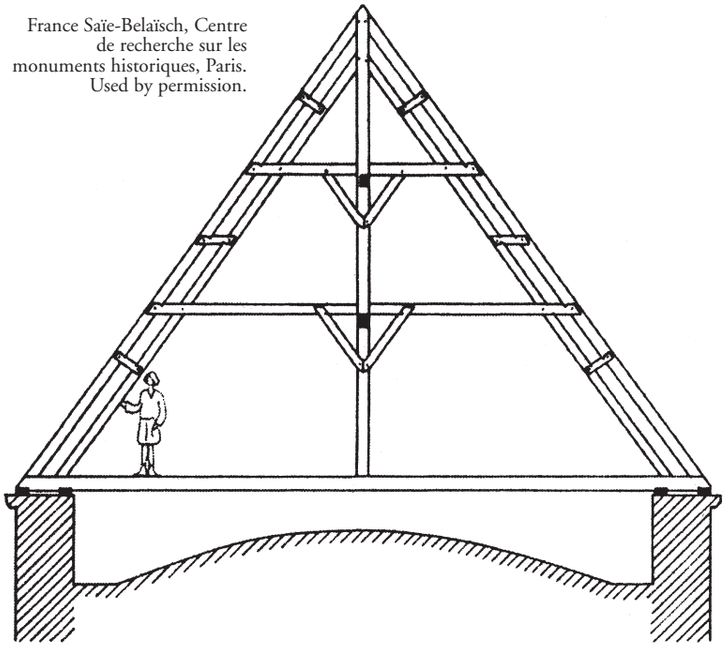

Fig. 7. Notre-Dame d'Étampes, 12th century. Doubled rafters are frequently bound together.

Archives photographiques, Centre de recherches sur les monuments historiques, Paris. Used by permission.

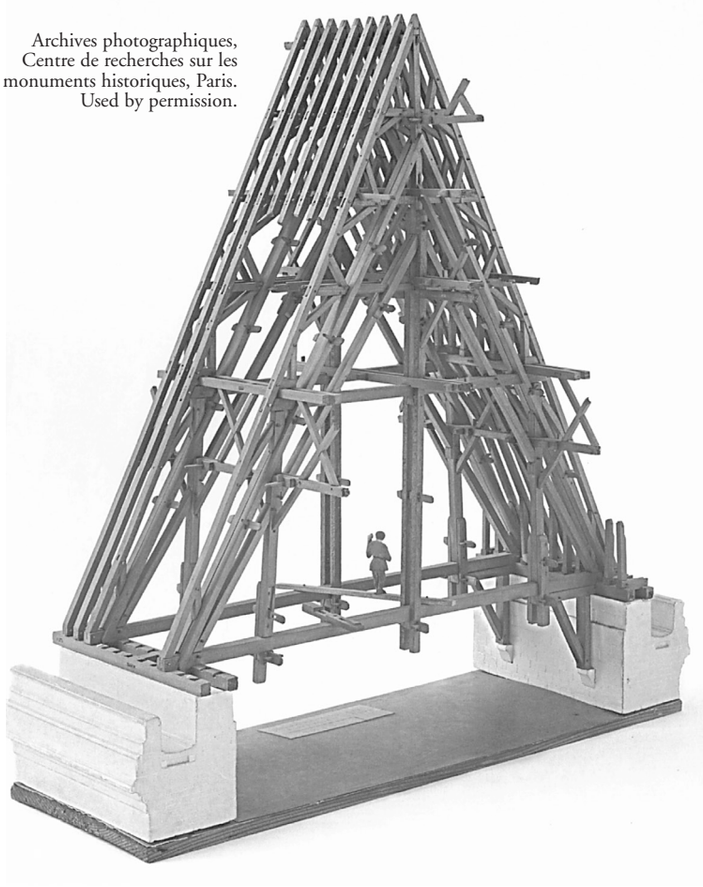

Fig. 8. Cathédrale Notre-Dame at Reims, 15th century, exceptional timberwork superbly modeled by Henri Deneux in the 20th century. The tie beam is hung from the collars as well as from the inner rafters.

An extensive glossary entry discusses these double principals under the term *sous-arbalétrier* (or sub-principal rafter), mentioning that their slope is often less steep than the outer principals and that sometimes they are curved (Hoffsummer, 201 ff.). Meetinghouse trusses at Strafford, Vt. (1799), exhibit such inner rafter slopes, among other archaic features, and at both Lynnfield Center, Mass. (1714), and Rindge, N.H. (1798), have curved inner rafters indicating the persistence of the form even among rural American framers without the ability to view the great store of examples found in the churches of England and the European continent.

The canted struts connecting these double rafters together and then running down to the kingpost are sometimes not in line, to avoid mortising the inner rafter excessively at a single location. Again, the possibility of some bending is accepted rather than abandoning the long love affair with the mortise and tenon joint and simply butting the struts at the rafters (Fig. 6 previous page). But as the 19th century progresses toward the 20th, the 1879 Barton, Vt., Congregational Church is using unmortised struts set in shallow gains, tacked with a nail (TF 69, 12).

GOOD VERNACULAR PRACTICE. The many roof frames examined in this series, even when combined with published drawings and descriptions of other trusses, number but a small percentage of what exists and what once existed. The trusses we looked at have all been standing in the northeastern US between 120 and 290 years and have periodically borne immense snow loads and sustained hurricane winds. With a couple of exceptions, those we examined qualitatively, investigating by eye and probative mallet taps, we found to be in excellent—yea, like-new condition—and thus examples of successful vernacular truss work.

The use of large-dimension timber wherever possible constitutes good practice in this endeavor. It makes up for errors and the traumas of existence. (If a frame is going to be strong, it should look strong.) Of the trusses we saw, only the Stowe, Vt., Community Church (1863) surprised us by its openness and slenderness. (medieval trusses frequently used slender members, but there were great numbers of members and they were densely framed.) Nearly all the rest produced an instinctive and emotional sense of strength and confidence. In his study of Connecticut meetinghouses, J.F. Kelly observed:

> An examination of existing roof trusses makes it at once apparent that most of the early builders, excepting such men as Hoadley and Town, were working mainly by "rule of thumb" and had no exact knowledge of engineering. The fact that the trusses they devised have supported the loads imposed upon them . . . is due in most cases to the tremendous size and strength of the oak timbers employed and the lavish use of material, rather than to the correctness of design. In many instances, the use of less material, arranged in better accordance with the laws of engineering, would have produced much stronger trusses (Kelly 1948, xliii).

Kelly was correct that large timber allows a framer to stretch some of the laws of engineering, but he was probably wrong in assuming that they didn't know when and why they were doing so. When Kelly conducted his remarkable survey in the 1940s, there were plenty of structural engineers around to pontificate on the topic of trusses, but perhaps not a single traditional framer alive to defend his work.

Species choice. In historic trusses and timber framing in the eastern US, species choice was mostly determined by conventional practice, what was available locally and the required length of members. The builders of coastal New England's 17th-century frames,

close to their English antecedents, at first used white oak, the New World species most like English oak, and then mixed oak species. The preference for oak in New England persisted late into the 18th century. When settlers moved to the interior where oak was less common, beech and other hardwoods were substituted.

From the late 18th century to the middle of the 19th, kingposts, struts, braces and studs might be mixed hardwoods, but the longer and larger members such as tie beams, principal rafters and plates were increasingly of various softwoods. For a multi-span kingpost truss bridge across the Richelieu River at St. Jean, Quebec, John Johnson placed one of the great timber orders of all time, asking for 231 pieces of 18x16x53 for "strings," 99 pieces 14x12x53 for "upper ditto" and 99 pieces 12x12x51 for "rafters," all white pine. He also wanted "5 tons iron" (Johnson Papers).

By the mid-19th century, frames were often all softwood, floated down or shipped in from timbered regions to the north and south. St. Peter's Church (1769) in Freehold, N.J., has trusses and a steeple built of oak and yellow pine, probably local. By 1854, the Salem, N.J., Presbyterian Church, on Delaware Bay much farther south than Freehold, has trusses and a steeple built of white pine, a tree not indigenous to the area. The timbers at Salem still contain the miscellaneous pins that helped bind them together in rafts of square timber as they were floated down the Delaware River from northern Pennsylvania or upstate New York. In Vermont, early trusses in the Connecticut or Champlain Valleys were mostly framed of white pine, hemlock and mixed hardwoods, all available there, while in the interior mountainous regions spruce framing predominated. At all periods of truss history, even that of ancient Rome, the immensely long sticks of wood that might be needed for plates or tie beams tended to be large pine, spruce or larch (Mark 1993, 200-203).

Quality of wood may be more important than species. Trusses made of all spruce, hemlock or old-growth pine seem to perform as well as those with substantial hardwood elements, across equal or greater spans. The efficiently arranged hemlock and pine timbers at Castleton Vt., Federated Church (1832), perform as well as the profusion of mighty oak and pine members do at Bethlehem's Central Moravian over nearly identical 60 and 65 ft. spans.

Species are often mixed within a frame and species choice was sometimes related to workload. In John Johnson's many lumber lists for trusses, he sometimes specified that the kingposts be "oak or yellow pine" and that all the other members be "white pine" (Johnson Papers). The architect Asher Benjamin was quite specific in *The Practical House Carpenter:* "Timbers in the foregoing examples of roofs, I have assumed to be of white pine, but if they should be made of hard pine, the size may be reduced somewhat, or if of oak, a considerable reduction may be made. It is best to use hardwood for kingposts" (Benjamin 1830, 86).

An instructive archive of sawmill business papers sheds some light on timber choice in frames in the early 19th century. Sumner and Page's sawmill in Hartland, Vt., rafted hundreds of thousands of board feet of timber, boards and shingles down the Connecticut River to southern New England every year. In 1819 Sumner responded to a request for "extra long pine" structural timber with the answer that "trees that will make such plank are very valuable" (Sumner Archive). He was probably hesitating because of the contemporary demand for clear white pine for large-scale classical revival architectural finish elements. For example, in 1824 John Moore of Savannah, Ga., wrote to D.H. Sumner that he wanted "clear white pine, 1-2 inches thick" and that he would pay $35-40 per thousand board feet. At the time, Sumner was selling merchantable grades of pine, hemlock, spruce and oak for $7 to $15 per thousand, some of it up to 60 ft. long. The problem in the 1819 request was that "extra long" pine would have to come from immense, high quality old-growth, with lots of clear lumber in the log, that was far more valuable sawn into boards. (Nonetheless, and possibly at great expense, St. Paul's Episcopal Church, built 1822 at nearby Windsor, Vt., included ten 7x13 50-ft. pine timbers in its scissor truss roof frame.)

In 1823 Sumner received an answer to a query of his own about selling spruce timber in Connecticut. David Wyse, a lumber dealer in Middletown, replied "Have made some inquiry and found that some do not like spruce timber as well as they like chestnut or oak." Wyse told Sumner he might get $9-10 per thousand for spruce as opposed to $10-15 per thousand for oak and chestnut. By the mid-19th century, spruce and Southern yellow pine had gained wide acceptance as framing timber even outside their growing regions. The 1869 scissor trusses in the Church of the Holy Apostles in midtown Manhattan are all spruce acquired somewhere in the interior of northeastern North America.

The aesthetics of framing. The dramatic entasis of the kingpost at the Castleton Federated Church, necked down from 11½x10 at the joggles to barely 5x10, can only be attributed to the framer's concern that his frame proportionally reflect load at every point and in that way be beautiful, rather than maintain surplus capacity. (The Castleton framer was Thomas Dake, famous for interior joiner's work such as pulpits and entryways.) In general, the earlier the truss the more likely it is to contain tapered rafters, tie beams with hewn or natural as well as induced camber, entasis in the kingpost, and curved inner rafters; Lynnfield Center, Strafford and Rindge provide us good examples. The later trusses illustrated in builder's guides such as Benjamin, Nicholson and Tredgold are drawn rectilinear and substantial, all the members uniform in section along their length other than at the joggles, stout looking and without curves or tapers.

While this notion of the aesthetics of framing is manifest in centuries of exposed decorated joinery, its persistence into the 19th century, when the great roof frames were concealed above plaster ceilings, suggests a particular devotion to craft on the part of

Jan Lewandoski

Fig. 9. Kingpost at Castleton Federated Church, 1832, much reduced below the head joggles to reflect its simple function as a tension member.

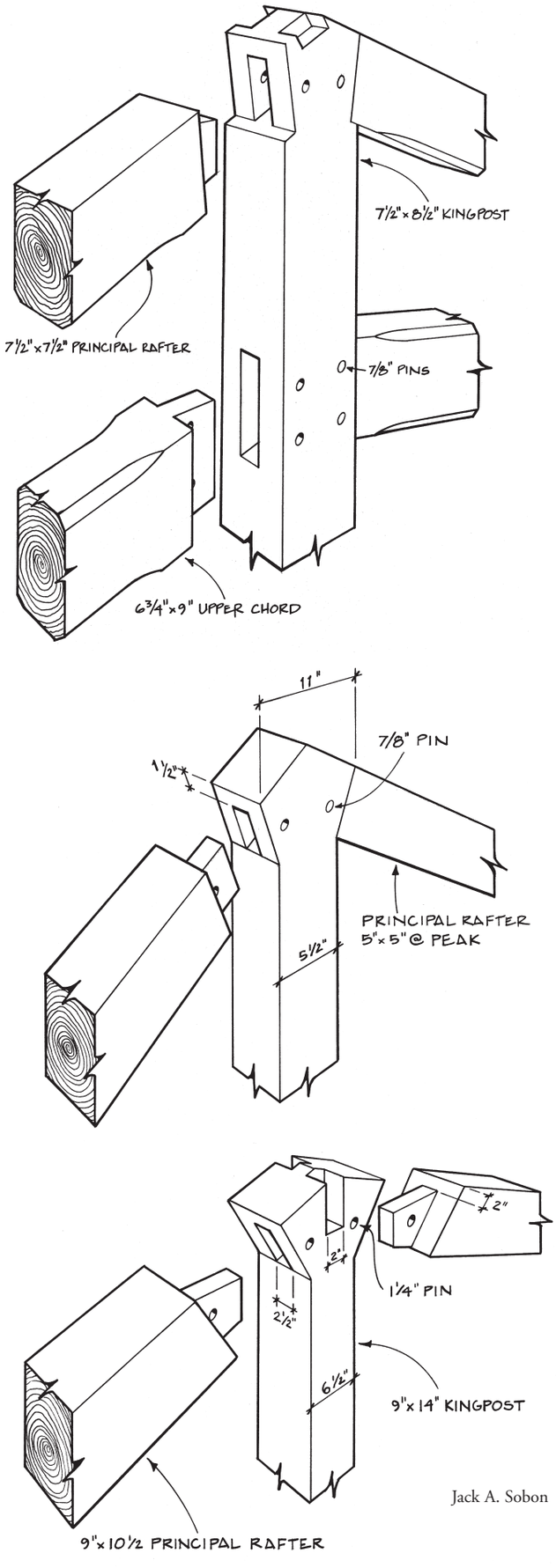

Jack A. Sobon

Fig. 10. Joggle angles at the kingpost head vary substantially, from negligible or nearly so (top, Lynnfield Center, Mass., 1714), to normal or nearly so (middle, Shrewsbury, N.J., 1769) to well undercut (above, Portsmouth, N.H., 1807). Some kingpost heads have no joggle at all.

framer and worker, and a view of beauty unwedded to decoration. The shaping of the kingpost at Castleton was expensive, making it proportional but not stronger, and any beneficial reduction of truss weight was minimal.

Joggles. Where principal rafters or upper chords meet the kingpost head, what is the importance of normal bearing? Of the roof trusses investigated for these articles, five presented normal (perpendicular) bearing between principal rafters and kingpost head joggles; six had some lesser degree of joggled slope or small bearing shoulder; and four allowed the tenon, friction and compression on the brace shoulder, together with any pins, to do all the bearing. Fig. 10 illustrates various angles of joggle incidence.

There appeared to be no difference in their performance. At Strafford there is no joggling for the outer rafters at the head of the post (nor for the struts near the foot of the post), and likewise at Windham there are joggles neither for rafters nor for struts. What then prevents the rafter upper tenon from pushing out the relish of its mortise at the kingpost head? The answer may lie in the tremendous friction developed by compression of the rafter's end shoulders into the side grain of the king- or queenpost at the mortise cheeks. Or it may be that the weight of the roof counteracts any non-axial moment developed at the joint. Builder's guides from Palladio through Price and Benjamin and beyond reinforce our intuitive belief that normal bearing in a joggle at a post head is crucial. But, according to our examination of large church roofs, it isn't.

Hoffsummer's survey of French roof frames finds rarely a joggle in the Middle Ages, where the generally very steep pitches would make normal bearing difficult to create without gigantic post widths. The low angle between rafter and kingpost in these steeply pitched roofs is conducive to non-axial slippage, but the latter may be counteracted by the greater size of bearing shoulder produced by this angle, and most of these roof frames provide plenty of relish anyway in the kingpost above the mortised connections of the rafters. Kelly's survey of Connecticut meetinghouses carefully illustrates the bearing angles and shoulders of 57 trussed roof systems, dating from 1753 to 1836, a period that begins before and then coincides with the widespread introduction of builder's guides depicting well-engineered trusses.

The results are presented in Fig. 11, with the church roof frames divided into three categories: normal bearing with joggles (top line); some joggling or shoulders but always less than normal bearing (middle line); and no joggles at all (bottom line). Trusses with perpendicular bearing at their joggled shoulders, as recommended in the builder's guides, become more common over time, but the unjoggled or slightly joggled forms don't diminish correspondingly, rather they coexist during the time period, which is one of transition. (The square rule displaces the scribe rule in those same years, and the cut nail displaces the wrought.) In my research, church attics after about 1845 never contain trusses without normal bearing between rafters and kingpost joggles.

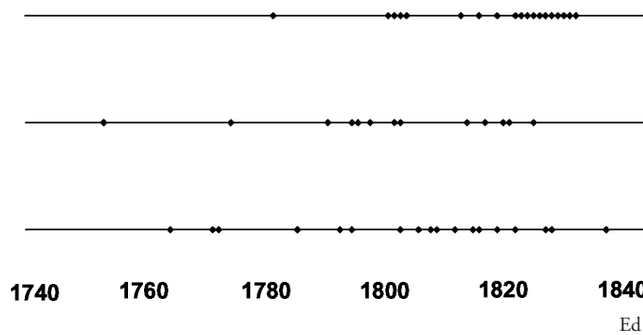

Ed Levin

Fig. 11. Frequency distribution of joggle types over time. Bottom line represents no joggle, middle line some joggle, top line normal bearing.

However, any survey of the vast array of American wooden bridges finds no builder ever trying to get away without joggles or normal shoulders at main brace and strut connections, perhaps because roof load is not carried by the main braces of a bridge, instead coming down the posts to be transferred to the main braces as axial load and doing little to restrain non-axial (lateral) movement. Or perhaps the practice is a comment on how much greater and more dynamic bridge loadings are compared to typical roof truss loads.

Double-rafter considerations. Ideally, the load coming down long principal rafters mortised or housed in a tie beam should arrive over a wall post or, at least, over a sturdy plate supported by a nearby post. But to do so leaves little relish between the mortise or housing and the end of the tie beam, a particular consideration for the low-pitched rafters of neoclassical churches with their large horizontal thrust component. The early introduction of a double or inner rafter placed farther inboard allowed more relish between the joint and the end of the beam and, equally important, distanced the joint from leakage and consequent rot caused by ice damming at the eaves in cold regions. This provision seems to be good practice even when weighed against the disadvantage that it delivers the majority of a truss load to the tie beam as much as 3 ft. inboard of the supporting wall, with some bending resulting. At the Strafford Town House, the outer rafter's relish had failed at four locations and the load had shifted entirely to the inner rafters at those slopes. At Lynnfield, 20th-century tie beam rot deprived the outer rafter of any bearing at one truss end, but was not catastrophic thanks to the inner rafter's bearing the load. The inner rafter and tie beam were able to bear the load nearly 2 ft. inboard of the wall with minimal bending, and this despite the removal for stylistic reasons in 1785 of large curved braces that once rose from the wall posts to the bottom of the tie beam.

At the Craftsbury, Vt., Town Hall, there are actually triple rafters, all tenoning into a 38-ft. 8x10 tie beam. The outermost is an 8-in.-dia. spruce log flattened on top that rises from the overhanging end of the tie to tenon into a mortised ridgepole carrying the tops of the common rafters in the same plane. The first inner rafter is a 6x7 tenoning into the kingpost and bearing on the tie beam about a foot from the wall. The second inner rafter is a 6x6, also tenoning into the kingpost and bearing on the tie beam nearly 5 ft. inside the plate. The kingpost picks up the tie beam with a wedged half dovetail joint that is now pulling itself open, probably because of the troublesome positioning of the shortest, stiffest rafter of the array, the inner 6x6 (Fig. 12).

If load goes to stiffness, any depression of the kingpost by roof loading on the upper rafter system will push down the second inner rafter upon an unsupported length of tie beam and tend to force the kingpost joint apart. In this assessment of the forces, the upper part of the kingpost is in compression while its lower part, below the junction with the second inner rafter, is in tension.

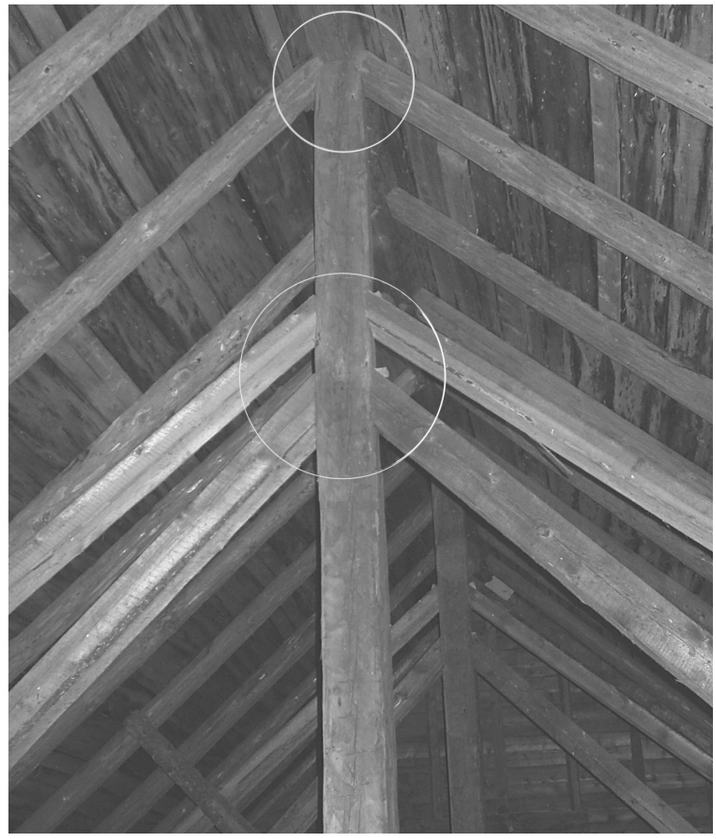

Jan Lewandoski

Fig. 12. Triple-rafter array at Craftsbury, Vt., Town Hall, mid-19th century. Uppermost rafters terminate in ridgepole (upper circle); inner rafters prop the kingpost (lower circle), offering unconventional path for roof load to tie beam (lower photo).

Ironwork. The assistance of metal at tension joinery in trusses is both venerable and desirable. Most of the truly long spans in our study use metal rods, bolts or U-straps as the primary tension connection between king or queenpost and bottom chord. These examples include the 59-ft. truss at St. John's Portsmouth (1807), the 65-ft. truss at Central Moravian (1805); the 52-ft. queenpost at Rindge (1797), as well as Castleton (60 ft., 1833), Brimfield, Mass. (54 ft., 1847) and Stowe Community (50 ft., 1863).

The 50-ft. scissor truss at St. Paul's Windsor (1822) allows the bottom of the kingpost to continue for almost 12 in. below the chord crossings, providing enough relish to obviate the need for metal. At First Parish Church in South Berwick, Me. (1826), the kingpost enjoys almost 24 in. of relish at the bottom. In addition, at both Windsor and South Berwick, the rafters are bent outward around the kingpost to leave more net section intact for the tension joinery. The 42-ft. scissor truss at Barton, Vt., Congregational (1876) employs kingrods, but this practice is partly attributable to the late date. Most of the trusses with spans under 50 ft. use all-wood tension joinery, either the wedged half-dovetail at Lynnfield Center (1714), Windham (1800), Peacham, Vt., Congregational (1806) and Huntington (1870), or the through tenon with multiple pins at Christ Church Shrewsbury (1769), the Strafford Meetinghouse (1799) and Sutton Baptist (1832).

Camber and Domes. Trusses have long been built with camber, producing a shallow vault transverse to the long axis of the building or, if the camber is slight enough, allowing the roof system to sink and

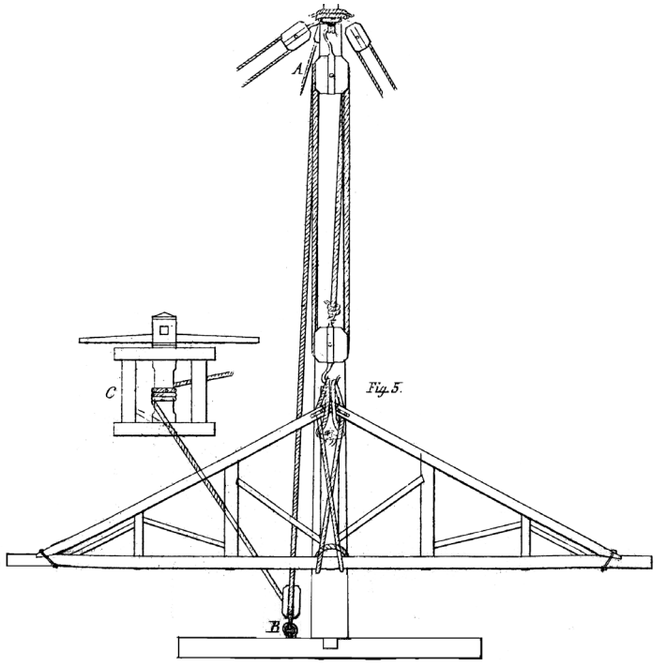

Fig. 13. Chester Hills' Fig. 5, an 1836 truss-lifting rig, showing footed gin pole with tensionable guys (A), anchored load pulley (B), windlass (C) and well-lashed demonstration truss. No tag line.

settle to near level. Nicholson observed: "In all timber there is moisture, wherefore all bearing timber ought to have moderate camber, or roundness on the upper side, for till that moisture is dried out the timber will swag with its own weight." He also recommended "that all beams or ties be cut, or in framing forced to a roundness, such as an inch in twenty feet in length, and that principal rafters also be cut or forced in framing" (Nicholson, 77). The inch in 20 feet recommended would probably compensate for shrinkage across fat kingpost heads, compression at heavily loaded joints and reduction in length from twist and other sources of deflection in the truss, but a great many trusses are cambered far more. Castleton has 2 in. in 20 ft. and the meetinghouse at Rindge as much as 8 in. in 20 ft., likely evidence the builders were trying for a vaulted effect.

Less obvious is the cambering of an entire truss system along the longitudinal axis of the building as well, producing a shallow dome over the audience room. This effect was obtained at Rindge (1797), Windham (1800) and Peacham (1806) by shortening the king- or queenposts toward the center of the roof, producing camber differences as great as 8 in. (Peacham) or 11 in. (Rindge) among the trusses. In the shallow domes in the two cases carefully measured, Peacham and Rindge, the residual transverse camber left in the trusses after 200 years is still almost twice as great as the original longitudinal camber built in by progressive shortening of the queenposts at each truss, working from the ends of the building toward the middle truss of greatest camber.

The aesthetic objective is not quite clear; the dome is not part of a sphere but of some ellipsoidal solid. The term "globe arch" is in use in some of the construction documents cited by Kelly in *Early Connecticut Meetinghouses*, referring to a saucer-shaped dome, but the examples he quotes and illustrates, such as the 1825 South Britain, Conn., Congregational Church, have much more depth and are picked out in paint and moldings as an obvious design feature (Kelly, II, 205). They are usually built under scissor trusses (which make room for the necessary curvature) by suspending curved-edge boards from the trusses and lathing them (Kelly, I, xlvi). I believe that the three shallow domes that we found in Vermont, all created by the cambering of the truss timbers alone, were intended to be felt rather than seen and as such have been little noticed.

HOW WERE TRUSSES ERECTED? At Castleton, the remains of a sort of fixed derrick exists in the attic, its 10x10 posts cut off below the roof and braced in both directions, probably to allow them to help lift trusses lying already framed on a scaffold at plate height.

There is sufficient evidence for the use of scaffolding in erecting trusses. The *1786 Rule Book of the Carpenters Company of the City and County of Philadelphia*, discussing kingpost and other long span trusses, specified "All scaffolding necessary for raising the above roofs, to be charged for by the time spent thereat" (Peterson, 5). Accounts of the tragic events at the raising of the meetinghouse roof system at Wilton, N.H., in 1773 described carpenters standing on staging that ran across the tie beams, already in place and propped at midspan by posts. From this elevated staging, and perhaps scaffolding built upon it, the carpenters were inserting kingposts and spars (rafters) into the joints of the tie beam, a piece-by-piece assembly, when the staging collapsed, killing five people (Clark, 1997).

Another truss-raising method is described in Chester Hills' *The Builder's Guide* (Hartford, 1836) and shown in Fig. 13 at left:

> Fig. 5 shows the method of raising a truss by a gin pole. This should be of a suitable length to raise the truss to its destined height and should be made either of pine or spruce, so as to be easily raised or lowered, a stick that is from 10 to 12 inches in diameter at the bottom and from 6 to 8 inches at the top will be sufficiently large to raise a truss from 60 to 90 foot span. . . . In raising the trusses of a church they should be put together on the main floor and well secured . . . when you have got one raised and placed to its proper place and well braced, slip the gin along to where the second one is to stand. A good set of hands working under a master workman will generally be able to complete the whole in one day.

Lifting trusses from the main floor as described here requires a tall gin pole, perhaps 35 to 50 ft. for most churches. From contemporary eyewitness accounts, such as those of raising the Stowe Community Church steeple in 1863, we know that gins as tall as 100 ft. in a single stick were in use even in rural areas (*History*, 8).

One raising procedure is very clear from the evidence of a great number of truss systems. Their builders did not attempt to engage the ceiling joists at the same time as the heavy trusses were being erected. They did frequently engage tenoned longitudinal connecting girts or X-bracing between the king- or queenposts of successive trusses, or they inserted one or two spacing girts at the tie beam level, the latter tenoned in or dropped into dovetail housings. But for the numerous ceiling joists, at least four different strategies were employed to allow them to be entered into the tie beams afterward, flush with the lower edge.

Long chase or pulley mortises might be provided in the tie beam at one end of a bay of joists and closed mortises in the tie at the other end, as at Rindge or the 1715 Hatfield, Mass., Meetinghouse. An analogous method, used at Brimfield, Mass., and Newbury, Vt., was to tenon joists into a mortise at one end and into an L-shaped slot on the other, the latter entering from the bottom of the tie and sliding over to the right position. A third method was to cut back the tenon shoulders at one end of a ceiling joist and chop its mortise extra deep in the tie beam, allowing the joist to be inserted deeply enough at one end to clear the face of the tie beam at the other. The joist then could be shifted safely to enter its far end into the mortise in the far tie beam; a nail tacked into the overlong tenon at the near end kept the joist in place. This system can be found in the 65-ft. trusses of the 1826 South Congregational Church at Newport, N.H. A fourth system, used at the 1815 Chenango Forks, N.Y., Methodist Church, provides stopped grooves open at the top to allow notched joists to be

dropped in (Fig. 14). With closely spaced trusses such as those at South Strafford Universalist (TF 67, 25), the problem of ceiling joists is simply avoided by nailing heavy furring on 24-in. centers directly to the bottom of the tie beams as the ceiling base.

Jack A. Sobon

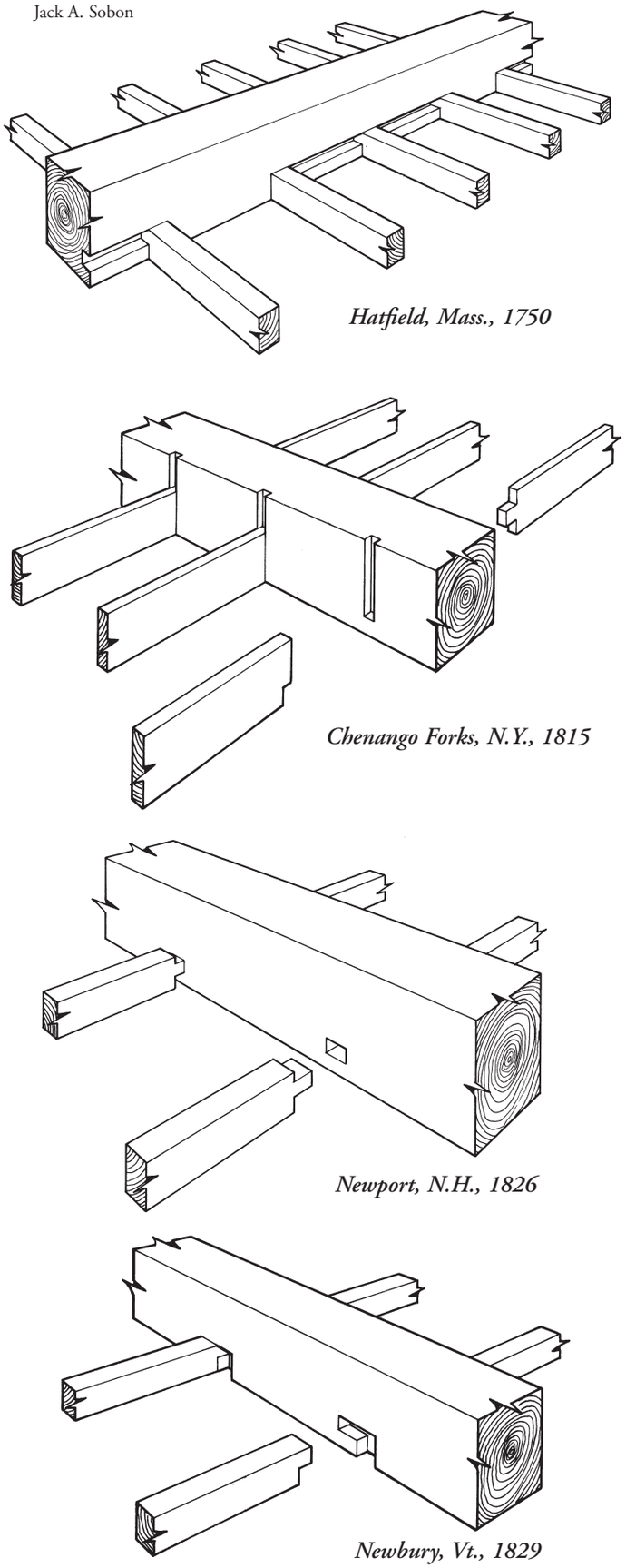

Fig. 14. Four strategies to admit ceiling joists between erected trusses.

WHY DO TIMBER TRUSSES GET IN TROUBLE? In our research, we generally looked at very successful examples. The notable exception was at the Waterbury Center, Vt., Community Church (1831), where undersizing of the main braces (upper chord members) of the queenpost truss had resulted in buckling and excessive compression at joints, sagging the entire truss (Fig. 15).

If undersizing of members was rare, incorrect understanding of truss behavior was more evident. The Village Congregational Church (1854) in Croydon, N.H., has three spruce kingpost trusses and a queenpost truss, the last at the back of the steeple, all spanning 36 ft., all with long-term problems due to misunderstanding truss form. Rather than the tie beam (the truss bottom chord) crossing the plate to receive the foot of the principal rafter (truss upper chord), the tie beam tenons into the side of the 8x9 plate and is secured with two 1-in. pins; the 2-in. tenon is 5 in. long. The principal rafters, rather than bearing on the tie beam, instead bear on the plate in a sort of birdsmouth joint. The result has been to force the plate outward off the tie beam tenon, first cracking the mortise cheeks then bending and shearing the pins. The resulting deflections in the truss, as great as 9 in., have caused distortions in the roof and sidewall and cracking of wallpost heads.

A version of the same design had been carried out, also in spruce, in the United Church of Craftsbury Common, Vt., in 1816, but with significant differences that made it work successfully. At Craftsbury, a 10x9 tie beam tenons into a 15x9 plate using a 3-in. thick through-wedged half-dovetail lying flat. An outer

Ken Rower

Fig. 15. Waterbury Center, Vt. (1831) has been patched up and cabled following queenpost truss failures. One evident cause is undersized main braces (white arrow), which descend from the queenposts to the tie beams and must withstand considerable compression.

principal rafter carrying its share of a deck of common rafters bears upon this plate, but an inner principal rafter is at work as well, 2 ft. inboard of the plate. The inner rafter induces local bending into the tie beam, visible to the eye, thus its service must be to carry much of the compressive loading on the truss. Combined with the resistance of the large and powerful tension connection between plate and tie beam, the result is that the plate is not being forced off the tie beam tenons at all. It is possible that the plate is as large as it is primarily to provide room for the wedged half dovetails to develop adequate tension capacity. The Craftsbury Common example shows that there may be no rules that cannot be broken by a knowledgeable framer—the meaning of our first epigraph.

Underestimation of steeple loads. Of all the causes of truss failure attributable to the dead load of the structure (rather than to roof leakage and consequent rot, or to hurricane winds), the weight and sometimes the dynamic loading of the steeple are the most common. The 18th- and 19th-century churches of eastern North America typically carried storied steeples that towered 30 to 150 ft. above the peak of the roof, heavy in themselves and subject to movement in the wind. Through much of the 18th century, these steeples rose from a tower with an independent foundation at one end of the meetinghouse, and posed no threat to the roof system. With the adoption of neoclassical styles in the late 18th century, continuing through much of the 19th, the steeple was moved onto the house itself, its framing resting on sleepers lying across the tie beams from the front wall back to the first interior truss and sometimes beyond. This configuration poses no problem if vertical framing such as posts or vestibule walls are positioned under the interior truss to carry the steeple loads to the ground, and such is the case at the 1826 Weathersfield (Vt.) Meetinghouse. However, for reasons of fashion, such was not the case in hundreds of churches in New England, which featured an open choir above the vestibule, thus omitting support for the truss and allowing the weight of the rear of the steeple to deflect it via the sleepers.

As the truss deflects while the front wall of the church remains stable, the steeple tilts backward into the church, giving a yet larger percentage of its load to the interior truss. Framers were aware of the problem but generally underestimated it. The construction of a queenpost truss using the rear steeple posts as the queenposts was common and helpful, but deep compression of the joints, compression buckling of the main braces and broken relish at the tie beam ends continued to allow deflection.

At St. Paul's Windsor, where the rear of the steeple sits several feet behind the vestibule wall, its loading has produced 3 in. of additional deflection in the first truss compared to its neighbors. This deflection has developed in spite of the framer's elaborate attempts to bring most of the steeple load forward to the vestibule wall (TF 69, 6). Generally, deflection of the first interior truss by a steeple is eventually slowed or arrested when the rearward component of its rotation jams hard against the connectors and braces from the following trusses, the roof decking, the ceiling joists and lath. One often finds later reinforcements, such as flying braces at the 1829 Newbury, Vt., Methodist Church (Figs. 16 and 17).

An important conclusion to be drawn from this study and from research into historic truss forms in Europe is that truss form evolution has been nonlinear. Fully realized and rationalized trusses existed in antiquity and were built occasionally in western Europe throughout the intervening centuries, when they coexisted alongside complex and indeterminate roof frames covering (and today still covering) some of the largest and most sophisticated structures ever built, the Christian churches and cathedrals of the Middle Ages and the Renaissance. Rather than seeing the timber framers of the period roughly 600-1600 as lost in a dark age of engineering ignorance, having forgotten the wisdom of the ancients, we should understand this period to be the historic high-water mark of timber framing in the West, and its framers to have been self-expressive, creative and daring under the constraints and challenges placed upon them. The development of modern truss forms and their joinery conventions after 1600 reflects partly the Enlightenment rejection of medieval conventions and partly an accommodation of architectural style to engineering ambitions for longer spans and, in the case of bridges, spans more heavily and dynamically loaded as well. The observed reduction of the variety of truss forms in the 19th century and the tendency to copy both form and joinery from books reflect the industrial revolution's demotion of skilled craftsman to laborer, and laborer to virtual slave, as much as any improvement in the roof systems of churches. Most of their spans, typically 40 to 60 ft., could have been roofed successfully with a variety of frames, both trusses and their vernacular structural relatives.—Jan Lewandoski

Jan Lewandoski of Restoration and Traditional Building in Stannard, Vt. (janlrt@sover.net), has examined hundreds of trusses and steeples.
Research and advice for this series of articles were contributed by Ed Levin, Ken Rower and Jack A. Sobon.

Fig. 16. Aftermarket seat for flying brace at Newbury Methodist (1829) to help resist sinking back of steeple added to church.

Ken Rower

Fig. 17. Long brace (white arrow) flies back from rear post of steeple frame at Newbury to lodge near good support in next tie beam (left).

Bibliography

Barlow, P. *An Essay on the Strength and Stress of Timber,* London, 1824 (first ed. 1817).
Bell, William. *The Art and Science of Carpentry Made Easy,* Philadelphia, 1857.
Benjamin, Asher. *The Elements of Architecture,* Boston, 1843.
——*The Builder's Guide, Boston, 1839.*
——*The Architect or Practical House Carpenter,* Boston, 1830.
——*The American Builder's Companion,* sixth ed., Boston, 1827.
Clark, C.E. *The Meetinghouse Tragedy,* Hanover, N.H., 1997.
Conwill, Joseph. "Town Lattice Roof Trusses in Madison, Indiana," *Covered Bridge Topics,* vol. LXLL, no. 2, 2004.
Dakin, James H. *Collection of architectural drawings,* New Orleans Public Library, nutrias.org/~nopl/dakin.
Gasparini, D. and Provost, C., "Early Nineteenth Century Developments in Truss Design in Britain, France and the United States," *Construction History,* vol. 5, Ascot, Berks.,1989.
Haupt, Herman. *General Theory of Bridge Construction,* New York, 1856.
Hewett, Cecil. *English Cathedral and Monastic Carpentry,* Chichester, 1985.
—*English Historic Carpentry,* Chichester, 1980.
Hills, Chester, *The Builders Guide,* Hartford, 1836.
History of the Stowe Community Church, Stowe, Vermont, 1981.
Hoffsummer, Patrick, et al., *Les charpentes du XIe au XIXe siècle, Typologie et évolution en France du Nord et en Belgique,* Paris, 2002.
Johnson, John. *Undated manuscript,* University of Vermont Special Collections.
——*Bill of Timber for Burlington Courthouse, 1802,* University of Vermont Special Collections.
Kelly, J. Frederick. *Early Connecticut Meetinghouses,* vols. 1 and 2, New York, 1948.
Lewandoski, Jan et al. "The Close Spacing of Trusses," TF 67, 2003.
——"Scissor Trusses," TF 69, 2003.
——"Queenpost Trusses," TF 71, 2004.
——"Kingpost Trusses, TF 72, 2004.
——"Composite and Raised Bottom Chord Trusses," TF 74, 2004.
Maggi, Angelo and Nicola Navone, eds. *John Soane and the Wooden Bridges of Switzerland,* London, 2003.
Mark, Robert, ed. *Architectural Technology up to the Scientific Revolution,* Cambridge, Mass., 1993.
Nelson, Lee. "Early Wood Truss Connections vs. Wood Shrinkage," *APT Bulletin*, vol. XXVII, no. 1-2, 1996.
Nicholson, Peter. *The Carpenter's New Guide,* Philadelphia, 1837.
Peterson, Charles, ed. *The 1786 Rule Book of the Carpenters Company of the City and County of Philadelphia, 1971.* Annotated facsimile.
Sganzin, M.I. *An Elementary Course of Civil Engineering,* translated from the French, Boston, 1827.
Shaw, Edward. *Civil Architecture,* Boston, 1836.
Smeaton, A.C. *The Builder's Pocket Companion,* Philadelphia, 1852.
Sobon, Jack A. *Historic American Timber Joinery,* Becket, Mass., 2002.
Sumner, D. *Archive,* Vermont Historical Society, Montpelier, Vt.
Tredgold, Thomas. *Elementary Principles of Carpentry,* Philadelphia, 1837.
Yeomans, David. *The Trussed Roof,* Aldershot, 1992.

Port Orford cedar, Curry County, Oregon

Trees selectively harvested.
Timbers sawn to your specifications.

EAST FORK LUMBER CO., INC.
P.O. Box 275 • Myrtle Point, Oregon 97458
Tel. 541-572-5732 • Fax 541-572-2727 • eflc@uci.net

Hull Forest Products, Inc.

Sustainable forestry, quality products

•Kiln-dried flooring:
red oak, white oak, and hickory
•Eastern white pine paneling and flooring
12-20 in. wide
•Post and beam timbers up to 26 ft. long

Proud manufacturers of
NHLA quality lumber

101 Hampton Rd. • Pomfret Center, CT 06259
tel 800-353-3331 • fax 860-974-2963 • www.hullforest.com
Contact Craig H. Capwell, capwell@hullforest.com