TIMBER FRAMING

JOURNAL OF THE TIMBER FRAMERS GUILD

Number 72, June 2004

Historic Kingpost Trusses

TIMBER FRAMING

JOURNAL OF THE TIMBER FRAMERS GUILD

NUMBER 72 JUNE 2004

CONTENTS

NOTES & COMMENT 2

TTRAG PROCEEDINGS 2004 4

MEDIEVAL ROOF CARPENTRY: CHARPENTE LAMBRISSÉE 8
Lynn T. Courtenay

HISTORIC AMERICAN ROOF TRUSSES 16
III. KINGPOST TRUSSES
Jan Lewandoski

On the cover, view of the cedar roof trusses at the monastery of St. Catherine's at Mt. Sinai, Egypt, built between 548 and 565 to commemorate the supposed site of the miracle of the burning bush. Kingposts truss the rafters only; the 20-ft. tie beams carry no ceiling load. Kingpost article begins on page 16. Photo, copyright 1995, by Lynn T. Courtenay.

Copyright © 2004

Timber Framers Guild, PO Box 60, Becket, MA 01223
www.tfguild.org
888-453-0879

Editorial Correspondence
PO Box 275, Newbury, VT 05051
802-866-5684 journal@tfguild.org

Editor Kenneth Rower

Contributing Editors
Guild Affairs Will Beemer, Joel McCarty
History Jack A. Sobon
Timber Frame Design Ed Levin

Published Quarterly. Subscription $25 annually (apply to any address above) or by membership in the Guild.
ISSN 1061-9860

TIMBER FRAMING, Journal of the Timber Framers Guild, reports on the work of the Guild and its members, and appears quarterly, in March, June, September and December. The journal is written by its readers and pays for interesting articles by experienced and novice writers alike.

1985

The Journal at 20

AS editor of this journal, I will happily come out from behind my desk to acknowledge the 268 contributors listed in the Cumulative Index for issues 1-66 (and more since then), and to wave hello to the 2000 people (in round numbers), who take their journals out of the mailbox four times a year. I don't know what happens to most of those journals. Some of them must be read: at long intervals, letters arrive here, to amplify or to correct. At even longer intervals, people speak up to wonder why this or that cannot appear in the journal. And, once in a blue moon, a commendation arrives.

TIMBER FRAMERS NEWS

Published by the Timber Framers Guild of North America — October 1985

GUILD CONFERENCE DRAWS 200

FRAMING SYSTEMS

The conference opened with a lecture comparing and contrasting methods of roof structure and joinery. Steve Chappell (Fox Maple Timber Framers), Ed Levin, and Jack Sobon showed slides of their work or of old buildings illustrating the question at hand, and offered extensive commentary on the English and early American antecedents of the various systems. The presentation then focussed on methods of tying the walls together against the thrust of a characteristic gable roof. Three systems were considered:

The first category (Fig. A), in its pure form, allows all methods of roof framing (purlin or common rafters or composite), and can be varied by substituting a set of girts for the continuous plate, thus granting the convenience of a bent system of raising, while retaining the ideal stability of the direct rafter to tie connection. The rafter to plate category (Fig. B) includes the variants of a level tie beam joined to the plate or a raised tie beam joined (relatively low down) to the rafter pair. The last class of construction, with rafter end-joined to the post-top (Fig. C), involves no plate whatever, but does require girts and purlins to connect the building lengthwise.

Fig. A Fig. B Fig. C

CONFERENCE REPORT

Against a background of handsome old buildings, perfect blue skies and the green foothills of the Berkshires, the first annual conference of the Timber Framers Guild of North America unfolded on the weekend of June 15. Some 200 persons assembled at Hancock Shaker Village, just west of Pittsfield, Massachusetts, to follow throughout the first day a variety of lectures and discussions on technical, ethical and business issues facing the timber framer. The evening offered a vivid slide show with commentary that gave more than a suggestion of the remarkable breadth of modern American timber framing.

At a plenary business meeting on the second morning charter members elected a Board of Directors for the coming year and held a wide-ranging discussion of practices and goals of the new organization. The conference concluded with a two-part lecture encouraging framers to consider that frames do not stand in isolation—functional, financial, or aesthetic—and that framers must take full responsibility for the design of the whole structure.

Participants and speakers came from twenty seven states and two provinces of Canada. About 100 joined the guild at the conference.

Further stories on the various events of the conference will be found on the inside pages of the newsletter.

GUILD OFFICERS

The Directors met in full immediately following the close of the conference June 16, and chose by consensus the following Executive Board:

President, Christopher Madigan, Mill Hollow, East Alstead, New Hampshire 03602.

Vice-President, Ed Levin, RFD 2, Canaan, New Hampshire 03741.

Clerk, Dennis Marcom, PO Box 3, Drewsville, New Hampshire 03604.

Treasurer, Jim Benson, RR 1, Box 207, Alstead Center, New Hampshire 03602.

Under the proposed by-laws of the Guild, the membership at large elects a board of directors, and the officers who comprise the Executive Board are chosen by the directors from their own number. The Executive Board serves for one year, but in this case all of its members had been among those five voted two-year directorships by the plenary meeting. The fifth director voted a two-year term was Kenneth Rower, Newbury, Vermont 05051.

The four directors elected for a one year term were Randolph G. Hager, 39420 S.E. Gordon Creek Road, Corbett, Oregon 97019; Jack Sobon, 3 Kerr Avenue, Adams, Massachusetts 01220; John Reed, Box 2098, Glenwood Springs, Colorado 81602; and Robert LaPorte, RR 3, Site 11, Box 39, Sudbury, Ontario, Canada P3E 4N1.

DIRECTORS MEETINGS

After their initial meeting June 16 to get acquainted and to elect officers, the Guild's Board of Directors met again June 18 to set goals for the coming year and to establish committees to handle questions raised at the conference. The Board held a third meeting September 8 to review plans and ideas and a draft of the newsletter.

The next meeting is scheduled for December. If you wish to have some item placed on the agenda, please write to the Clerk or to your favorite Director. Minutes of the meetings are available to Guild members by writing the Clerk.

The journal began life as a four-page newsletter called *Timber Framers News*, set in Goudy and printed in black ink on buff paper, which summarized the events at the Guild's charter conference four months earlier in June 1985 at Hancock Shaker Village in Massachusetts. The little paper was taken up about evenly with administrative and technical matters: right off the bat, we were talking about the evolution of the tying joint and how mortise-and-tenon joints fail when pulled apart forcefully. Five issues later, the little paper grew higher, wider and perhaps handsomer, now set in Garamond on white paper in a tabloid format, seen above right.

BULK RATE
U.S. POSTAGE
PAID
Keene, NH 03431
PERMIT 14

TIMBER FRAMERS NEWS

Timber Framers Guild of North America, Inc. — Number 6, November 1987

Directors Chart Course For 1988

THE GUILD'S Board of Directors, following an innovative plan formed at the June conference, met in full September 11-13 at Portsmouth, N.H. for a weekend of concentrated discussion and decisions. Out-of-state directors John Reed (Colorado), Jeff Arvin (Michigan), Rudy Christian (Ohio), Jack Sobon (Massachusetts), Steve Chappell (Maine), and Ken Rower (Vermont) joined New Hampshiremen Tedd Benson, Ben Brungraber and Ed Levin, while Cyndy Gardner (Tennessee), Conference Committee chair, joined Sharon Bosies, administrative assistant to the Board, to report on their activities and clarify their future roles in the Guild.

The meetings began Friday night after dinner and concluded Sunday at noon, with breaks for meals and sleep. Dozens of decisions were taken, and a clearer picture of the Guild in the years ahead was sketched in, particularly at a kind of symposium Saturday night.

The financial structure of the Guild came in for lengthy discussion. The Guild has grown much faster than the officers have been able to develop accounting methods, and Treasurer Ben Brungraber has thus engaged a firm of commercial accountants to set up the books properly. He has also adopted a system for the checkbook that makes it possible to track expenses. We are now to expect brief quarterly reports and a full annual report.

Ben also sees the need to put in place certain operating principles to assure the financial stability of the Guild. Memberships currently fund about half of our annual operating expenses, with the difference made up by surplus income from the Annual Conference. At some point the Conference risks being a flop, or costing more than anticipated (as it did somewhat this year), and therefore, the reasoning goes, it should not be relied upon to maintain the regular administration of the Guild.

AFTER SOME exploration, the Directors accepted a view of Guild monies in two categories, discretionary and non-discretionary. Non-discretionary income is represented by membership and other annual fees, and should be set high enough to assure payment of non-discretionary expenses, considered to be (notably) administration, newsletter and membership list. Discretionary income, on the other hand, would typically include conference revenues and the proceeds of other activities sponsored by the Guild. Each year discretionary activities such as conferences and workshops could be budgeted according to income available in that category.

This two-pot approach nicely separates out the issue of the annual maintenance of the Guild, leaving the question how exactly to raise the needed money. Rudy Christian proposed raising membership fees while simultaneously adjusting members' discounts for the Conference, thus keeping a typical member's total annual expenses about the same, but redistributing the money in favor of the non-discretionary category. Ben thought the Directors should move forward on the development of a new service that would be of obvious financial value to the membership—namely the publication of a directory of timber frame companies (as distinct from the list of members) in which firms and individuals offering to build timber frames would be described in text and photos. While the idea of the Directory has been broached before, Ben saw its potential use as an annual revenue device to strengthen the non-discretionary income account, and this notion met with favor among the Directors. The fee for an annual listing remains to be set, although the price of the Directory when sold to the public would naturally reflect the costs of printing, advertising and distribution, so that the fee could set independently.

Cyndy Gardner

Around the table in the Size Inn at Portsmouth, clockwise from left: Ed Levin, Jack Sobon, Steve Chappell, Ken Rower, Tedd Benson (Clerk), John Reed (President), Sharon Bosies, Jeff Arvin (Vice-president), Rudy Christian and Ben Brungraber (Treasurer).

THE TESTING Committee's major project, the development of design-stress figures for oak, which might then lead to grading standards for oak timbers, has reached a certain stage. (See the tabular report elsewhere in this issue.) Al DeBonis has submitted an interim set of numbers which the Guild owns but which are not especially useful by themselves. However, a number of other organizations have expressed interest in the project and Al DeBonis has proposed that the Guild release the numbers with the understanding that the other organizations would fund the project to completion. With the support of the two directors who also sit on the Testing Committee, the proposal was accepted, with one important qualification. The methodology of the calculations required the inclusion of all species of oak conceivably in structural use, and further that the properties of the weakest of these be used as the basis for deriving allowable stresses. This approach yielded improbably low figures for the modulus of elasticity, the key determinant in sizing beams used over an open span. The qualification on the release of the DeBonis numbers was to point up this anomaly, and to request a determination whether the species that pull down the results could properly be excluded from the calculations, on grounds of rarity of use. It is to be hoped the outcome of this entire well-intentioned project will indeed make professional life easier for timber framers.

JEFF ARVIN, liason to the Education Committee, reported the group has established good communication lines among its members, and intends to keep busy with a long list of activities. But it appears to need some guidance from the Board in order to focus on a few things and obtain definite results. The Board agreed that Jeff should formally ask the Committee to produce the long-proposed Bibliography, carry on with its membership profile questionnaire and propose a single specific out-of-conference workshop, complete with budget. The unilateral decision of a couple of Education Committemen to film the Brattleboro raisings was applauded in the event, but Tedd Benson pointed out that in principle it would be better if such activities were proposed to the Board in advance.

CONFERENCES took the lion's share of the Board's attention during Saturday's meetings. There were first of all immediate administrative decisions to make regarding the 2nd Western Conference (scheduled for November 6 at Timberline Lodge, Mt. Hood, Oregon). In most respects a scaled-down copy of the recent national conference at Poultney, Vermont, the western version was developing all of its parts except the trade show, in doubt because of lack of appropriate space at Timberline, and because of administrative stalls at the subcommittee level. The Western Steering Committee asked the Board to cancel the trade show on its behalf, but after a vigorous discussion which went first one way, then the other, the Board voted to return the question to the conference organizers, with recommendations. There is an issue developing here of autonomy, and another issue of redundancy, both of which are going to require the Board's increasing attention.

The Mid-western Conference announced at Poultney in June, meanwhile, remained mostly theoretical. Scheduled for mid-February, this effort was at the stage of choosing a site and surveying the interests of regional members.

As to the 1988 National Conference, the main lines are developing rapidly with Cyndy Gardner in charge. The site will move somewhat South and West this time, to Elizabethtown College in Lancaster County, Pennsylvania, about twenty minutes' drive from Harrisburg. The dates are fixed for June 9-12, with the first day, a Thursday, set aside for arrival and registration during the afternoon and evening, with an additional one-hour period Friday morning just before the convocation of the Conference. Thursday night will also provide the opportunity for an informal reception with refreshments. Certainly this amenity was pleasant and successful at the Charter Conference at Hancock in 1985, and it has been missed at the conferences held since.

The usual questions arose concerning registration deadlines, where two principles collide: first, that no one should unnecessarily be excluded from the Conference, and, second, that a nearly exact advance head count is important

It remained thus, appearing quarterly, for 21 issues until March 1993, when we adopted the present magazine format seen at right in its first, austere, livery. Meanwhile, in December 1990, the better to reflect the evolving nature of the publication, we had changed its title to *Timber Framing*. (You can thank Jonathan Orpin for that simple, sturdy name, proposed when I sought his advice at the Timberline 1990 conference.) And to provide a monthly venue for Guild news and a means for our first executive director, Jim Young, to communicate with the membership, we had also set up a new monthly publication, *Scantlings*.

At first, the magazine *Timber Framing* was strictly black and white and without advertisements. The latter appeared after two years (and much anguished discussion), and we began to use color in 1998 (biting our lip at the new expense). Today we try to use a mix of signatures, reflecting the mix in our editorial material.

WHAT is that material? This number of the journal carries the third installment in our series on historic American timber trusses; a rich scholarly article on a special form of European medieval timberwork; and proceedings of the traditional timber framers' conference in New Hampshire in March. All of this material is historical. There is no underlying intention that the magazine restrict itself to historical matters, and not all issues of the journal are purely thus (there are 64 items in the Subjects column of the Cumulative Index). But, more frequently than not, and with the large and notable exception of engineering discussions, what crosses my desk deals with old timber frames here and abroad, not new ones.

Is there nothing much to say about new timber frames except for their engineering? Mr. Orpin, this time at Montebello 2003, had another direct suggestion: "If I were you, I'd show nothing but modern work." But what is modern work, in any sense beyond possessing a recent construction date? What constitutes modern style in today's timber-framed domestic architecture? The Capes and saltboxes of the first years of the timber frame revival, with (for instance) their painfully disproportionate 8x8 common purlins running exposed through the half-baths, have been succeeded by more supple designs. In conference slide shows, we see the slimming influences of Japanese minka, the Craftsman Style, the bungalow; we also see the exaggerating influence of full-scribe log buildings and trophy houses.

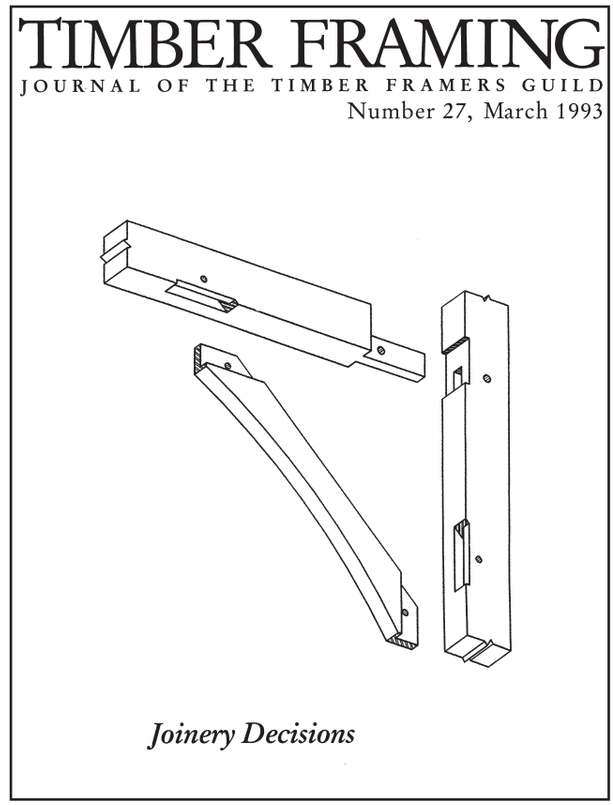

TIMBER FRAMING
JOURNAL OF THE TIMBER FRAMERS GUILD
Number 27, March 1993

Joinery Decisions

The general commitment to fully exposed timber inside and externally applied insulation, a technique of saving energy now become a style, seems too strong to allow reconsideration of the high styles of American domestic architecture, in which the timber frame served as the firm skeleton of a structure, but in modesty, covered by materials better adapted to showing the furnishings of a room. The most influential system with an exposed frame, the Japanese, shows no diagonal braces and originally presumes no loose furnishings; the integrated details of the windows and screens, the clean-cut boards of the ceiling and the floors, these are the objects we gaze at. There is no clash between the rhythm of the frame and the rhythm of the contents of the space, the usual risk of an American timber-framed interior. Given the profusion of our possessions, we might be better served by neutral plastered walls and cased-and-painted main members, as perfected in the early 1700s. Is it time to explore that technique again, adapted to our own generous use of glass? Lately, straw-clay walls offer the possibility in some, perhaps many, climates of freeing the eye from our showy confusion of timber posts and braces—not to mention freeing the anxious mind of thoughts about the petroleum-based insulation hidden behind the gypsum. The last is a story in itself, but all these questions of design are fair objects of our attention, and they should be explored more often in this journal.—KEN ROWER

TTRAG Proceedings 2004

THE old New England coastal city of Portsmouth, New Hampshire, once known as the Port of Piscataqua, provided the stage and much of the subject matter for the Guild's Traditional Timber Frame Research and Advisory Group's 2004 symposium, held March 19-21 at nearby Durham. This gathering, which drew some 140 historic-framing specialists and enthusiasts, was the largest in the 13-year history of the group's public symposia, but retained its defining structure of all-plenary sessions. The building tour visited a working sawmill and an early barn in Durham, then decamped for the rest of a Saturday to the treasures of old Portsmouth. Presenters in addition to those given here included Steve Card (timber grading), Richard Harris (English barns), Rod Bishop and Victor Wright (flashing and roofing), and Arron Sturgis and John Butler (barn assessment and recording).

Ken Rower

St. John's Church, Portsmouth, N.H., 1807, designed by Alexander Parris. Roof framing combines a kingpost truss above the collar beam (below) with arch braces beneath, and posts apparently extended into the attic from the galleries below (above right). Iron straps abound.

Under the roof at St. John's, curved ceiling joists are hung by wooden staves. Note forelock-bolted iron strap binding collar beam to rafter.

The Warner House (1716) and its Roof

Richard M. Candee

THE Warner House is named for Jonathan Warner, a Portsmouth merchant who in 1760 married Mary Macpheadris Osbourn, who had inherited this extravagant brick house built in 1716. Her father, Archibald Macpheadris, was an ambitious sea captain, a Church of England royalist from Northern Ireland, who arrived in Portsmouth in 1715 and soon married Sarah, the 15-year-old daughter of New Hampshire's Lieut. Governor John Wentworth. Archibald, Sarah and their children (plus Archibald's brother and his family) occupied the large house until 1729. It was subsequently rented to Sarah's brother, Governor Benning Wentworth, until he built a country mansion in 1759.

Macpheadris's house was built under the direction of John Drew, a recent immigrant to Boston (after its great fire in 1711) from Deptford, England—the Thames Royal Navy Yard town. Drew's name is known from his surviving bill for work between December 1716, when he began supervising the masons, and 1719, when a court case finally settled the last details. From Drew's memorandum book (1707-1732) discovered a few years ago, now at Strawbery Banke Museum, we learn that Drew was a general contractor and master carpenter for both ships and buildings in Deptford before emigrating to Boston about 1712.

I believe Drew worked on the Clark-Franklin House in Boston, now destroyed, from which several raised panels with similar moldings still survive at the Society for the Preservation of New England Antiquities. Macpheadris sailed often into Boston harbor and, after buying the two empty lots in 1715 in Portsmouth on which his brick house was to sit, probably sought whoever built that or several other post-fire new-style mansions in Boston. In any event, he hired Drew to come to the provincial capital, Portsmouth, on the Piscataqua River.

Drew's bill to Macpheadris describes "94½ Square of framing in the floor & Roofs at 15d" plus "26 Square of double boarding of roof at 8/" and "30 Sq: of roof flooring at 4/" plus "ye Cupilow with Ornaments." Also related to the roof were the "8 Lutherns" or dormers (now only seven), "96 foot rail & Bannisters @ 3/," and "250 foot of trunks & Gutter at 2d." A further item in Drew's bill

The Warner House, Portsmouth, N.H., 1716.

View under one side of the M-roof, with heavy collar beams carrying ceiling joists for the chambers below. Catwalk gives access to area seen in photo below.

Ken Rower

View under the triangular cap that made the roof a sort of gambrel. Original shingles remain on formerly exposed pitch.

to Macpeadris cites a large quantity of "Sheet lead at 9/4," which supports the notion of the house having originally had an an M-roof. Such a quantity of lead would have been needed to flash the valleys on the inner legs of the M. The M-roof was a common type in late 17th- and early 18th-century England for covering a two-room-deep plan, especially as large timbers (otherwise necessary for a full-span roof) had to be imported. In southern England, snow seldom accumulated, and rain could drain from a lead-lined valley through downspouts at the centers of the end walls. (In the case of the Warner House, water could drain from either side of the cupola through holes pierced in the end walls to feed the downspouts, of which traces remain visible on the brickwork.) But in snow-covered New England, the M-roof proved less practical.

Soon protected by a cap that turned the M-roof into a gambrel form, its original frame survives complete with shingles in the inner valley, replaced only at the base of the original cupola because of water damage. In fact, the volume enclosed under the chevron of the M permits an attic story of four rooms (three of them heated by fireplaces) and a large hallway, lighted by dormers. The double roofs sit above the collar beams, with the joists between supporting the plaster ceiling of the attic.

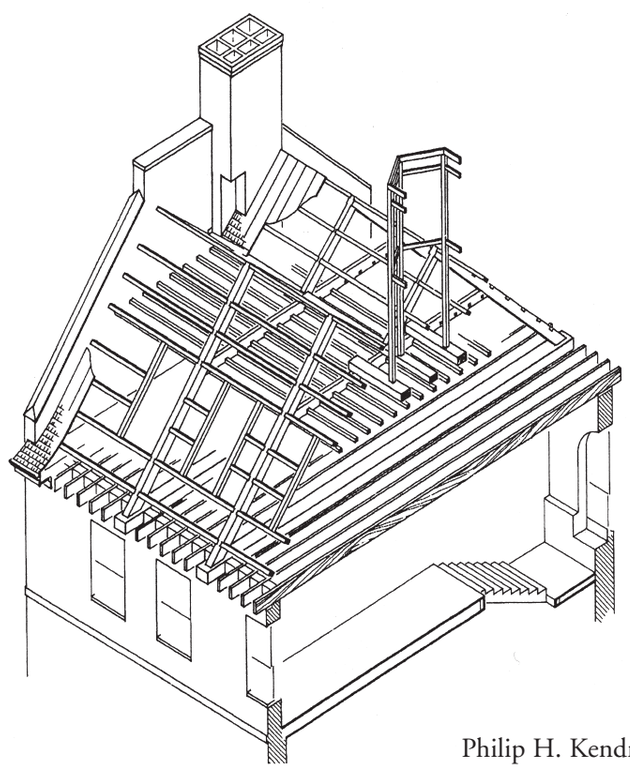

Philip H. Kendrick

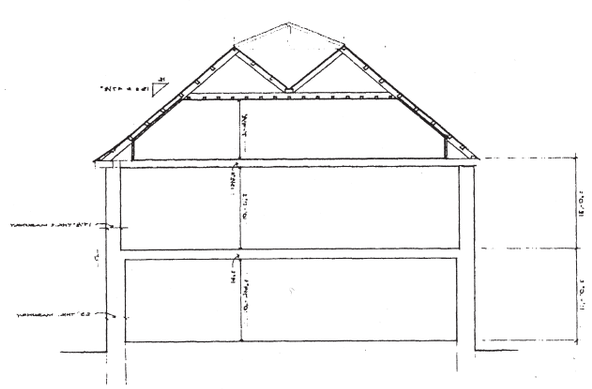

Original valley drained through downspouts fixed to the end walls of the house.

Archaeology and Architecture at the Chadbourne Site (1643-1690)

Emerson W. Baker

NINE seasons of excavation at the Chadbourne Site in South Berwick, Maine, have created a rare opportunity to learn about the early architecture of the region. Most houses in Maine were destroyed in a series of frontier wars; the oldest standing house in the state was constructed in 1707. Excavations at this site and other 17th-century Maine sites indicate that the architecture and construction techniques of northern New England differed significantly from surviving first-period buildings in Massachusetts.

The Chadbourne Site is an extended complex of buildings constructed by two generations of the family. Their occupation of the site began in 1643 and ended when the property was destroyed by a French and Indian raid in 1690. Humphrey and Lucy Chadbourne built the main house in 1664. It was a substantial house, a fitting residence for one of the wealthiest merchant families in New England. The house was well appointed with fancy hardware, a plastered parlor and two brick chimneys.

Despite the wealth of the family and the size of the structure, much of the timber-framed house was built with earth-fast posts and other simple techniques. Much of the lean-to had no foundation or footing, just wooden sills laid on grade. Although the cellar was substantial, most of its walls were wooden planks, held in place by the earth-fast posts. Even the two chimney bases were clay rather than stone or brick.

Why did the Chadbourne family resort to such poor quality construction techniques? An acute shortage of skilled labor meant that they had to resort to shortcuts. Furthermore, they were owners of an adjacent sawmill: if parts of the house rotted, the latter could be easily replaced. Excavations throughout Maine suggest that most early homes in the region were built in similar "impermanent" fashion.

The Chadbourne house initially consisted of a hall and parlor, with a lean-to, lean-to chamber, and chambers on the second floor. Over time, a series of outbuildings were connected to this main building, forming an enclosed compound. In size and shape the Chadbourne homestead more closely resembled an English manor house with courtyard rather than a typical 17th-century New England home. Results of the ongoing excavation of the site can be seen at www.salemstate.edu/~ebaker/chadbourne.htm.

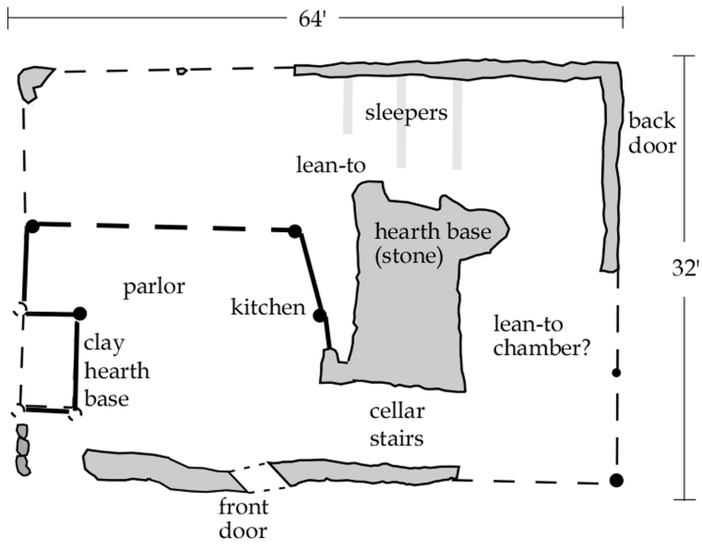

Plan for the 1664 Chadbourne house.

Building Frames for the West Indies

James L. Garvin

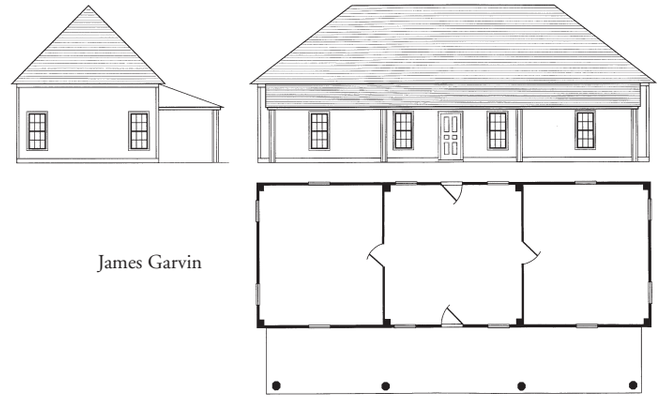

Grenada house plan and elevation.

BEFORE the Revolution, when Americans traded freely within the British Empire, New England carpenters and merchants supplied hundreds of building frames to the British West Indies. While most of these structures were apparently intended as dwellings, some were stores or shops. Customs records indicate that many frames were destined generically for the "West Indies," while others were specifically dispatched to the islands of Grenada, Tobago, Dominica and St. Vincent's.

The Piscataqua region of Maine and New Hampshire, with its access to the vast pine forests of northern New England, was a major exporter of frames. Between 1770 and 1775 alone, 147 building frames in 28 separate shipments for the West Indies left the Port of Piscataqua, today known as Portsmouth, N.H.

The Larkin Papers in the Portsmouth Athenaeum document a specific instance in a memorandum of agreement, dated 6 November 1772, between Josiah Clark of Nottingham, N.H., and Aaron Hodgdon of Newington, housewrights, and Joshua Wentworth of Portsmouth, merchant. Clark was a well-known carpenter in the region, having built a meetinghouse in Stratham, N.H., in 1767 and another in Rollinsford in 1772. Clark and Hodgdon agreed to deliver (in two months' time)

> a house of the following dimensions: to be 50 feet long by 18 feet wide, with a gallery the length of the house for one side eight feet wide, the plate to be 10 feet high, the height of the gallery posts not lower than the top of the windows, [a] pavilion [hipped] roof. To have a hall of 18 feet in the middle with a door and two windows in each side [of the hall]. A chamber at each end with four windows each, two [on] each end and two [on] each side, and 12 framed glass windows . . . to be cased to prevent being broke. All the doors and window shutters to be made of good clear white pine, and double paneled and cased. To have spouts all around the house, to be made of the best yellow pine, and the frame likewise. Also, the inside to be planed and beaded. To be completed and delivered to said Wentworth [at Portsmouth] in a workmanlike manner and to his liking by the sixth day of January.

New England merchants sometimes recruited local craftsmen to travel to the West Indies to assemble and finish these buildings. At about the same time that he signed this contract, merchant Wentworth placed an advertisement in the New-Hampshire Gazette of October 23, 1772, for "two house carpenters, and a blacksmith, young men. . . . for 6 or 12 months in service to be done at the Island of Grenada, next year. . . ."

Yin Yu Tang: Reconstructing an 18th-Century Chinese House in America

Jan Lewandoski

CHINA has a timber framing tradition at least 3000 years old. The tradition is similar to Western framing in many ways: its repertoire of joinery likewise includes mortise and tenon, dovetail, half-lap, bridle, scarf et al., driven, as in the West, by the characteristics of wood. But the tradition has significant differences as well. The cultural importance of timber framing in China cannot be overstated—all the great structures of the Forbidden City in Beijing are timber framed, as is the Temple of Heaven, most other important historic monuments and most residences (probably until the 1960s) in areas where wood was available. Historic structures that appear to be all masonry from the outside usually have a complete timber frame exposed inside.

Chinese carpentry techniques and design were first exported to Korea and then, around 700 AD, to Japan. Differences evolved among these East Asian cultures, and many of us, familiar with Japanese technique, are surprised to learn that the Chinese push their saws and planes rather than pull them. The biggest differences I see between the Chinese tradition and that of Europe and America are that the Chinese use few diagonal braces and don't employ the truss. Further, they scribe laminate rather than joint to build up deep or large members, and they use a layout system based on ink center lines that is neither scribing nor squaring, but might be called transposition, and which has a specialized set of tools that make it possible. It is likely that nowhere in the West was so much wood carving regularly included in buildings.

In 1998 I was asked to reassemble the exposed frame and woodwork of a 20-room merchant's house, a two-story, courtyard-style house with masonry exterior walls brought from central China to the Peabody-Essex Museum in Salem, Massachusetts. Fortunately, we had the help of four highly skilled Chinese carpenters, three stone masons and several brick layers and plasterers, who showed us construction and assembly procedures that we might never have guessed. Mike Cotroneo and I worked with these craftsmen for several years restoring the frames, reassembling the wooden interior and building some new outbuildings to accompany the house. I was able to go to China several times to examine the context the house emerged from.

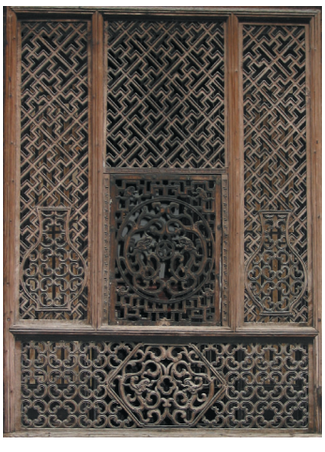

One of the pierced wooden screens for windows facing the courtyard in important rooms at Yin Yu Tang. Each panel is carved from a single plank of camphorwood.

In its new role as a Massachusetts public building, Yin Yu Tang (Hall of Plentiful Shelter) had to meet modern engineering and safety criteria. As a Chinese might say, "the struggle was very complex." It required our developing new design values for Chinese wood species, destructive testing of recycled material, actual load testing of members thought inadequate by the engineers (revisiting a problem many times if necessary) and the making of some structural compromises, mostly concealed in the masonry envelope or above the ceiling. With its accompanying kitchen and gong tower, the reconstructed Yin Yu Tang can be visited at the Peabody-Essex Museum. Images of the house can also be seen on its excellent website at www.pem.org/yinyutang.

Jan Lewandoski

At top, Cheng Hui using the Chinese adze cross-grain to form a tenon on a 3x12 connecting beam held by three-legged Chinese ma (horse). At middle, looking outward from set of entry columns absent big doors to come (the spirit screen) toward stone framing of the main entry; ceremonial red banners mark successful raising of frame. Above, exterior view of main entry and plastered-brick and sandstone façade.

Medieval Roof Carpentry: Charpente Lambrissée

TIMBER FRAMERS who have roof-crawled in France or who have had a chance to see the splendid illustrations in *Les Charpentes du XIe au XIXe siècle* (2002) by Patrick Hoffsummer et al. will perhaps be struck by the wealth of early framing concealed above masonry vaults. This rich yet unseen legacy abounds in roofs of cathedrals and great churches whose timberwork supports the characteristic high gabled roofs associated with medieval architecture in northern France. From the 13th century well into the modern era, steeply pitched roofs (57 to 63 degrees) covered in reflective materials of lead, slate or glazed tiles became a status symbol of French aristocratic architecture, whose iron-crested roofs marked the skyline of the medieval landscape. Both early and present views of medieval buildings of the Île-de-la-Cité in Paris recapture this style (Fig. 1).

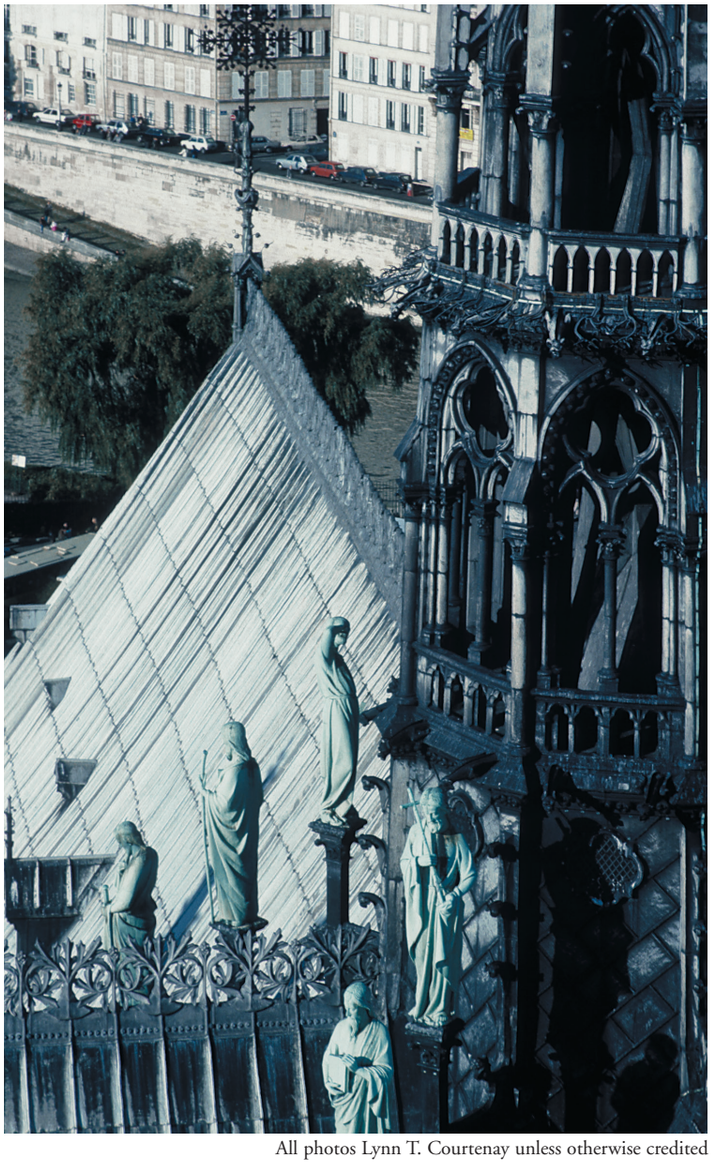

All photos Lynn T. Courtenay unless otherwise credited

Fig. 1. Spire and roofs of Notre-Dame de Paris (primary construction dates, 1155-1240). Framing of nave and choir roofs is medieval; spire and transept roofs were rebuilt under the direction of Viollet-le-Duc in the mid-19th century. Figures represent Apostles; Viollet-le-Duc (in profile facing the spire) is portrayed as the Apostle Thomas, the carpenter.

Architectural historians often neglect the timberwork that created these striking visual forms. On the other hand, historic carpentry specialists, apart from those concentrating on vernacular architecture, tend to disregard the structure that a roof surmounts. Whatever the approach of scholars may be, we can be certain that the medieval mason and carpenter, smith and glazier worked together in coordinating the appearance of a building's interior and exterior: seating of the roof, critical support conditions and how fenestration, vaults or ceilings might be accommodated according to the patron's desires.

Roofs above vaults offer the carpentry enthusiast a variety of ingenious truss forms, as builders experimented in their conquest of span, height and stabilization. The work of the noted French

Fig. 2. Notre-Dame de Paris: nave model by Henri Deneux (1916), at the Centre de Recherche des Monuments Historiques (CRMH), Paris. The carpentry dates primarily to the first quarter of the 13th century. Timber is all oak, of uniform scantling, and the framing powerfully though lightly built considering the cathedral's overall scale; the internal span is about 43 ft. This is one of the earliest northern European roofs known to comprise multiple hangers and axial bracing (roof plates) in an integrated design. The careful seating of the roof is noteworthy in the carpenter's use of saddle brackets to brace the tie beams from below, three wall plates per side with the ties notched over them and diagonal struts from the wall posts to the innermost wall plate that oversails the masonry parapet (lower left). Clearly the master carpenter was concerned about stability and the creation of a frame that could support workers and materials for the construction of the masonry vaults below.

architect Henri Deneux (1874-1969) indicates the importance that he and subsequent colleagues assigned to roofs above stone vaults erected in the period between c. 1200-1500 (see Hoffsummer 2002, 25-31). Beginning with Viollet-le-Duc in the 19th century, historians of early carpentry have divided timber roofs into two major classes: concealed framing and visible, or open, timberwork.

In the first category are the roofs hidden above vaults or ceilings, as seen in Deneux's model (1916) of the nave framing of Notre-Dame de Paris (Fig. 2). Also in this hidden class are the internal framing of spires and belfries, as in Fig. 1 illustrating the exterior view of the roof and spire of Notre Dame (see Courtenay 1997), constructed between 1155 and ca. 1240. While Deneux, like Viollet-le-Duc (1859) and Ostendorf (1908), was a pioneer in recording and classifying early roofs, his models do not, for example, indicate the six-part vaults of the Paris choir and nave; nor do they tell us the relationship between the crowns of these vaults, the tie beams and the abutment.

In contrast to the unseen and often inaccessible roofs above stone vaults, open-timber roofs are far more familiar and richly rewarding for those who visit rural barns, vernacular buildings or parish churches. In these building types widely distributed across northern Europe, the carpentry plays a key visual role in the character of the interior or exterior of the building. In France and the Low Countries, open roofs, half-timbering and aisled construction are frequently seen in non-elite structures such as barns, granaries and market halls like those at Argences, Arpajon, Brançion, Lorris and the well-preserved example of Milly-la-Forêt (CRMH 1983) on the western edge of the Forest of Fontainebleau in the Île-de-France (Fig. 3).

Fig. 3. Market hall, Milly-la-Forêt, 1479, with three-aisle basilican layout and double-framed "Latin Truss" roof with multiple purlins.

This robust structure, erected about 1479, is entirely timber framed in oak with the wide central aisle spanning just over 26 ft. This "nave" is flanked by lower and much narrower side aisles, thus producing the traditional basilican layout or three-aisled axial plan. The aisles are divided into structural bays by principal trusses, and a double-framed Latin Truss with a braced hanger and a ridge purlin spans the wide central aisle (Fig. 3, lower). An analogous structure in scale and plan (but with a different framing design) is the splendid 13th-century Cistercian grange of Ter Doest in Lissewege near Bruges, Belgium (see TF 62).

HYBRID FORMS. Distinct from the two major classes of medieval carpentry stands an important hybrid construction that integrates roof and vault and unites the traditional categories of concealed and revealed carpentry. In French, this combined roof truss and paneled timber vault is variously termed *charpente lambrissée, voûte en berçeau, charpente en berçeau or lambris en berçeau,* translated as a curved, cradle-like frame covered with thin boards or wainscot (*lames*), applied (generally nailed) to the inner surface of common rafters that form the vault ribs (Fig. 4).

The term *lambrissé* has also been applied to paneled, wooden ceilings and coving, but here I use it in the narrow sense of vaulting. In all cases of which I am aware, the timber vault is structurally integral to the roof framing and attached to the common rafters and their bracing system. While timber vaults have been noted, mainly as mere imitation of stone vaulting, there is a significant hybrid that combines the closed vault form with an open truss as, for example, the cloister at Tréguier Cathedral (Fig. 4). This typical example represents numerous others in France culminating in such splendid interiors as the hospitals at Tonnerre and Beaune. Before turning to its variants, let us then look at the main components of the hybrid *charpente lambrissée:* 1) the vault frame of uniform scantling, and 2) the tie beam truss with a central hanger.

Fig. 4. Fifteenth-century cloister vaults at Tréguier Cathedral in Brittany, illustrating typical charpente lambrissée with intermediate kingpost trusses.

The truss form frequently used in continental roof carpentry consists of a tie beam to contain the horizontal forces at the wall head (where the roof is likely to spread) and a central vertical member (in tension) designed originally to support the center of the tie over long spans, i.e., more than about 30 ft. This vertical member descending from the roof apex and joined to the tie beam is called a *poinçon* in French. In some roofs, however, like the late 12th-century framing of the choir of Notre-Dame de Paris and the roof of the hospital chapel of St. Jean at Angers, the hanger or hangers do not extend to the ridge and are called *moises pendantes* or *clés pendants* (Deneux 1960, 6 and Viollet-le-Duc 1862, III, 17).

In England, the corresponding vertical member is called a kingpost when it supports a ridge piece and, more recently, a king strut when the post carries no ridge piece (Alcock, 1989). In the same British royal vein, lateral posts are termed queenposts and the smallest verticals princess struts. (American truss builders speak of kingposts, queenposts and princeposts, respectively, without reference to a ridge piece.) English engineers generally term vertical tension members "hangers." In English carpentry nomenclature, there is no precise term other than "hanger" or sometimes "hanging post" to describe accurately a continental hung kingpost truss, possibly because British medieval carpenters failed to understand and apply this construction in the way exploited by carpenters across the Channel. The critical difference (often misunderstood) is that French medieval carpenters did not place a point load in the middle of the tie beam, and they knew how to use tension joints effectively.

The ancient Mediterranean origins of the hung kingpost truss exploited by the Romans can be inferred from Vitruvius, archaeology and the de facto achievement of colossal spans in public buildings, with ties up to 100 Roman ft. obtained from larch and pine. An extant example, though of very small span, remains in the cedar nave roof of the 6th-century church of St. Catherine's at Mount Sinai in Egypt (cover photo). This Roman roof form with transverse braces and purlins (called the Latin Truss) clearly continued into the Christian era and was used in early Christian basilicas in Italy and south of the Alps. From the evidence available (Krautheimer 1937 and Rondelet 1803), it is very likely that similar structural principles were observed to maintain, repair or replace these roofs, such as the huge, trussed-purlin roofs in Rome of the five-aisled Lateran Basilica of St. John, built by Constantine in 313 and later redesigned by Borromini (1646-1650); Old St. Peter's (323-347, rebuilt 1605-1613), with an internal nave span of about 72 ft. (Fig. 5); and the better recorded and wider span nave (about 80 ft.) of St. Paul's Outside the Walls, begun ca. 384-86, but destroyed by fire in 1823.

Prestigious basilicas and the pilgrimage traffic to Rome fostered by the Carolingians in the 9th century no doubt encouraged the revival of Roman building traditions north of the Alps. What remains a mystery and highly debatable, however, is whether the triangulated truss using tension members that emerged in northern continental roofs of the 12th and 13th centuries was imported into this different building tradition initially without principal trusses and purlins—seen, for example, at the hospital chapel of St. Jean at Angers and Notre-Dame de Paris (Fig. 2), where the tie beam trusses and common rafter frames maintain a system of uniform scantling (see Deneux 1927, 53-58). Do the Paris roofs and similar structures represent continuity or reinvention? Given the intense experimentation in roof framing in the early 13th century, my inclination is toward the latter answer. Whatever its transalpine origins, the tie beam truss with a central hanger, often with transverse bracing, was used ubiquitously in northern France from the late 12th century to the modern era (Fig. 3 lower). Moreover, in my period of interest, this truss form often became an integral part of timber vaults at a time when primary trusses were evolving into a bay system of roof framing.

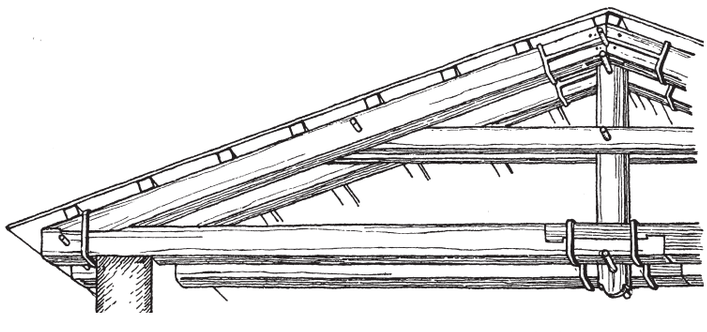

Ostendorf, after Rondelet, 1908

Fig. 5. Old St. Peter's, Rome, AD 323-347; internal span about 72 ft. The drawing is of a primary hanging kingpost truss restored in the 14th century and recorded by Carlo Fontana in the early 17th, redrawn and published by Rondelet from whom Ostendorf (1908) obtained the version presented here. Compare the tension joint of the hanger to Notre Dame's in Fig. 2.

VAULT FORMS. It should be made clear that the French *charpente lambrissée* describes barrel or tunnel vaults in contrast to groin, four-part or multi-ribbed, lierne vaults in stone. (Well-known English examples in which masonry forms are clearly imitated in wood can be seen in the lierne vault of the Chapter House at York Minster and the tierceron vault of the octagonal crossing at Ely Cathedral.) In *charpente lambrissée*, vault profiles are variable and may be semicircular, pointed, flattened (parabolic) or, in rare instances, of double curvature. But, whatever the shape, these vaults result from an axial projection of arches whose profile is reinforced by a series of transverse ribs. In some cases, the transverse rib is emphasized in conjunction with the bay divisions provided by tie beams spaced at long bay intervals, as in the roof at Honfleur (Fig. 12 below) as well as at the early 17th-century parish church of St. Aignan in Chartres.

While tie beams regularly appear in this type of construction, there are also examples in France of vaults without ties, such as the upper hall at the Château of Sully-sur-Loire (Fig. 6 facing page), dated by dendrochronology to 1401-1460, a roof-vault combination that continues the northern European tradition of uniform scantling (Viollet-le-Duc 1862, III, 32-33). While domestic roofs of this type rarely survive in France, the numerous pictorial representations of timber vaults both with and without tie beam trusses strongly suggest that open trusses, closed vaults and also ceilings coexisted in relatively high-status buildings in France and Belgium.

Given the general popularity of the paneled vault and exposed tie beam truss, it is not surprising that this hybrid combination should occur in a variety of buildings regardless of the scale or the necessity to have a tie to keep the roof from spreading at the wall head. In cases of moderate to small spans, it is difficult to say whether social values, traditional workshop practice, visual aesthetics or perceived structural needs accounted for the endurance of *charpente lambrissée* from the late 12th to the 17th century. These proposed reasons are by no means mutually exclusive, since the invention, application, preference and endurance of certain architectural styles and features are surely too complex to have a single cause.

French and Flemish roof-vault combinations present a unique form of structural carpentry that is simultaneously structural and decorative. The historical context in which timber vaults first appear suggests that initially they emerged as a mark of high-status fashion for elite patrons, perhaps taking precedence over open roofs and decorative ceilings. The vault form altered an interior space profoundly, and the molded, chamfered, carved or painted tie beams contrast markedly to the plain timber framing above stone vaults or in vernacular buildings. While tie beams continued

Fig. 6. Deneux's model (CRMH, Paris) of the roof of the upper hall of the Château de Sully-sur-Loire, 1401-1460. Framing is of uniform scantling, in the northern European tradition, and closely spaced.

to be used in French roofs into the later Middle Ages, they never appear below the surface of a masonry vault. Conversely, the V-struts or lateral braces attached to kingposts that frequently appear in open roofs or those above vaults do not appear below the vault surface in roof-vault hybrids, a fact that seems not to have been observed previously (cf. Fig. 3 lower and Fig. 11).

HISTORY AND CHRONOLOGY. Evidence from surviving roofs, inventories and numerous manuscript illuminations indicates that the period in which *charpente lambrissée* developed and flourished was from about 1200 to 1550. On the early side, Patrick Hoffsummer has cited the church of Mée possibly dating to the 12th century and the nave of Saint-Fiacre at Villevallier at the beginning of the 13th century (Hoffsummer 2002, 158). The earliest securely dated example in Belgium is the wooden vault of the chapter house of the Abbey of Val Saint-Lambert in Seraing dating to 1233-1234. In France, the earliest dendro-dated *charpente lambrissée* survivals are in episcopal palaces, at the synodal hall in Auxerre (1248-1249) and the bishop's palace at Laon dating to 1250 (Hoffsummer 2002, 158). While only a few examples can be discussed here, it is important to note that timber vaults occurred in a considerable range of scale, from the small spans of cloisters to enormous open halls. By the end of the 13th century, this type of construction is seen on a magnificent scale with clear spans that exceeded any width that could have been achieved in stone—that is, wider than 52 ft., the nave span of Chartres, one of the widest medieval cathedrals.

There is some debate why the wooden vault emerged. Was it as a poor man's answer to stone? Did the popularity of decorative ceilings persist from earlier practices before the advent and wide dissemination of masonry vaults in the late 12th century? Or, was the roof and vault combination an invention of Franco-Flemish carpenters in response to patronage demands and the tendency to abandon common tie beams as forest resources dwindled? One can find supporting evidence for all of these interpretations, except perhaps the poor man's vault (*voûte des pauvres,* Hoffsummer 2002, 155), since there is considerable evidence that *charpente lambrissée* was a preferred type of interior covering for the aristocracy and wealthy patrons who, like Philip III the Bold, King of France 1270-1285, or Philip IV the Fair, King of France 1285-1314, could have built their halls in stone had they chosen to do so. There is little discussion of this issue in any of the literature. What is undeniable, however, is that the hybrid vault offered a considerable advantage over stone in its constructional expediency.

By the 15th century, *charpente lambrissée* was not only used to span large, unaisled infirmary halls, notably those at Byloke, Tonnerre, and Beaune, but was also ubiquitous in France. Clearly, medieval carpenters had devised an appealing and versatile framing that satisfied the aesthetic requirements of churches, upper floor royal halls and private residential chambers, or the open wards of hospitals. The 19th-century archaeological inventories of medieval buildings in the cantons of the Tonnerrois in northern Burgundy indicate a significant number of parish churches vaulted in wood as well as a few château halls (Quantin, *passim*).

SELECTED BIBLIOGRAPHY

ALCOCK, N.W., Barley, M.W., Dixon, P.W. and Meeson, R.A. *Recording Timber-Framed Buildings: An Illustrated Glossary,* CBA,"Practical Handbooks in Archaeology," No. 5, 1989.

CRMH (Centre de Recherche des Monuments Historiques). *Charpentes de halles et de granges, vol I.* Paris, 1983.

CHALLE, A. *Histoire du comté de Tonnerre.* Auxerre, 1875.

COURTENAY, Lynn T. "Viollet-le-Duc et la flèche de Notre-Dame de Paris: la charpente gothique au XIIIe et XIXe siècles," *Journal d'histoire de l'architecture,* 2 (Grenoble 1989), 53-68. Reprinted in English: L. T. Courtenay, ed., "The Engineering of Gothic Cathedrals" (Ashgate Studies in the History of Civil Engineering), pp. 311-325.

_____. "Ghent: Byloke Abbey and Hospital," *Grove International Dictionary of Art*. London, 1996 (online at www.groveart.org).

DENEUX, Henri. *Charpentes,* 2 vols.. Paris: CRMH, 1959-60.

_____. *"Evolution des charpentes du xie au xviiie siècle,"* *L'Architect*, 4 (Paris, 1927), 49-68.

DORMOIS, Camille. "Déscription des bâtiments de l'hôpital de Tonnerre," *Bulletin de la société des sciences historiques et naturelles de l'Yonne* VI (1852), 177-89.

HOFFSUMMER, Patrick et. al. *Les charpentes du xie au xixe siècle, Typologie et évolution en France du Nord et en Belgique.* Paris, CRMH, 2002.

_____. "La Charpente de la Salle des Malades de l'Hôpital de La Biloque à Gand," *Actes du 51e Congrès de la Federation des Cercles d'archéologie et d'histoire de Belgique,* I (Liège, 1992).

KRAUTHEIMER, Richard, Corbett, S., and Frazer, A. *Corpus Basilicarum Christianarum Romae.The Early Christian Basilicas of Rome (IV-IX cent.)*, 5 vols. Vatican City, 1937.

OSTENDORF, F. *Geschichte des Dachwerks*. Berlin and Leipzig, 1908.

QUANTIN, Max. *Répertoire archéologique du Département de l'Yonne.* Paris, 1868.

RONDELET, Jean Baptiste. *Traité théorique et pratique de l'art de bâtir.* 4v. Paris, 1803-1814.

VIOLLET-LE-DUC, E.E. *Dictionnaire raisonné de l'architecture française du xie au xvie siècle*, 10 vols. Paris, 1859-62.

Add. 54782, used by permission of the British Library

Fig. 7. Illustration of Christ washing the disciples' feet, from a Flemish book of hours in the British Library, ca. 1480.

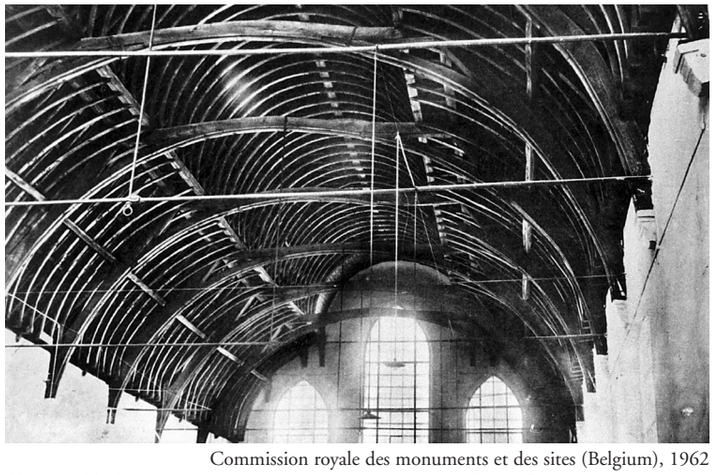

Commission royale des monuments et des sites (Belgium), 1962

Fig. 8. Trefoil roof design of the main ward of the Cistercian hospital of Byloke in Ghent, dated by dendrochronology to 1255. The roof type is an aisled-hall derivative composed of "short principals" and resembles base crucks that developed in England and the Low Countries during the 13th century. The east end retains some of its original paneling or lambris; the tie-rods and corbels date to the 17th century.

Photograph©2004 Museum of Fine Arts, Boston

Fig. 9. St. Luke Drawing the Virgin, 1435-1440, by Rogier van der Weyden. The connection of kingpost to tie beam is visible against the lighted circular window at the top of the painting. Careful study will reveal the corbels supporting the tie and the profile of a timber vault.

MANUSCRIPT EXAMPLES. While only a fraction remains of what surely existed by 1400, the proportion of wooden vaulted interiors in Franco-Flemish Books of Hours and early panel painting is astounding even in a cursory survey. Indoor scenes from saints' lives and the Gospels such as the Annunciation, Pentecost, Christ and the Apostles in the upper room, the Marriage at Cana and the like often portray an interior that is either ceiled or vaulted in wood. Similarly, secular scenes of patrons giving audience, or a presentation or dedication page in a manuscript, may also show timber vaulting.

The two examples selected from a variety of book illustrations and panel paintings illustrate the two major types of timber vaults used: one, with only the vault, and the second, a vault combined with a prominent tie beam truss. The first miniature is from a Flemish Book of Hours (The British Library) depicting Christ washing the disciples' feet (about 1480), possibly produced in Ghent for Edward V of England (Fig. 7).

This miniature shows an unusual but significant example of an upper floor hall in which the vault design is based on a cusped trefoil very similar to the mid-13th-century *charpente* at the hospital of Byloke in Ghent (Fig. 8). The hall depicted is a room with masonry walls, round-headed, glazed windows and corbelled colonnettes with capitals between the windows, which serve visually and perhaps structurally to support the primary trusses and ribs of the timberwork. The moldings (roof plates?) that divide the vault longitudinally on either side are exactly analogous to the double roof plates in the structure at Byloke.

The second example, *Saint Luke Drawing the Virgin* (1435-40) by Rogier van der Weyden (Museum of Fine Arts, Boston), is a

popular medieval subject that usually takes place in a private, secular chamber and thus reveals an intimate, well-furnished interior (Fig. 9 facing page). While the miraculous portrait sitting is entirely imaginary, in the hands of Flemish artists of this period everything is represented as tangibly real. In the Boston panel, the Virgin, humbly seated on a low bench, suckles the infant Jesus while Luke in close proximity draws her portrait. The iconography, combined microscopic and telescopic perspective, as well as Rogier's style and oeuvre *per se*, have fascinated art historians; however, our interest is the *charpente*, namely the vault and the relatively heavy kingpost truss that divides the chamber into two bays and from which the embroidered canopy of honor for the Virgin is conveniently hung. The tie beam is supported on masonry corbels just beneath the wall head where the curve of the low timber vault begins and forms a semicircular arch that rises just above the bull's-eye window in the end wall of the chamber. Given the artist's interest in the primary subject and its setting—an interior juxtaposed with the fascinating view to the exterior garden, parapet walk with figures and the expansive landscape beyond—the wooden vault (in deep shadow) is hardly a focus of artistic interest. Yet, despite its pictorially minor role, the vault and its profile are clear enough, and here we can appreciate exactly how the *charpente lambrissée* extends the height of the chamber. One only has to imagine the same interior ceiled at tie beam level to comprehend how the truss-vault combination worked spatially. The fact that the timberwork has nothing to do with the iconography, unlike the enclosed garden, Luke's writing desk or the Virgin's cloth of honor makes its rendering a convincing document of a potentially real early 15th century chamber that is very similar to Rogier's *Annunciation* (Alte Pinakothek, Munich).

PRIMARY EXAMPLES: HONFLEUR AND TONNERRE. Like most early roof carpentry north of the Loire and examples portrayed in contemporary illustrations, the *charpente* generally surmounts a masonry building. There is a notable exception, however, to masonry as primary support for a timber vault, namely, the parish church of Ste. Catherine's at Honfleur, dating to the late 15th century (Figs. 10-12). Ste. Catherine's is entirely timber framed; unlike the market of Milly-la-Forêt (Fig. 3) and similar halls and barns, it is a double-aisled hall church, where the vaults rise to the same height, in contrast to the higher central aisle and lower side aisles of the traditional basilican plan. The double-aisled plan is visible on the exterior (Fig. 10). This form recalls the Parisian palace (Palais de la Cité) of King Philip the Fair, whose timber-vaulted hall, built about 1306 to 1313 and destroyed in the 17th century, has fortunately been recorded in manuscript paintings, engravings and contemporary documents. (The lower, stone-vaulted knight's hall of the palace survives and is open to the public.)

Although influenced by Anglo-Norman building traditions and allegedly built by ship's carpenters, the pointed tunnel vaults with an open truss are firmly rooted in northern French carpentry. Ste. Catherine's is not only a hybrid structure that combines a vault form with timber-framed aisled construction, but it is also a building that links vernacular and elite architecture, as was often the case with parish churches.

The outstanding survival of French medieval *charpente lambrissée* is undeniably the infirmary hall of the Maison Dieu of Fontenilles in Tonnerre, established in 1293 by Marguerite of Burgundy, Queen of Sicily and Jerusalem and hereditary countess of Tonnerre. Despite its immense scale (externally about 89 ft. tall and 68 ft. wide by 128 ft. long including the chapel), the hospital was apparently constructed in a remarkably short time; for, just two years later, on the 16th of March of 1295, the papal legate and the Cardinal of Preneste blessed the charitable establishment. The exterior with its masonry walls and flanking buttresses resembles

Ste. Catherine's photos Will Beemer

Fig. 10. Twin apses at Ste. Catherine's Church, Honfleur (Normandy), late 15th century. Timber-framed church is clad mostly in shingles.

Fig. 11. Twin porches and double nave at Ste. Catherine's. Exposed colombage visible at right on lean-to addition amd porch pediment.

Fig. 12. One of two vaults at Ste. Catherine's. Empty mortises, patched lambrissée and change in rib centers indicate historic alteration.

Fig. 13. The Maison Dieu in Tonnerre (1295). The vast roof, originally covered with glazed tiles, measures some 4500 sq. meters.

the silhouette of a barn or market hall with characteristically low walls in comparison to the great expanse of roof (Fig. 13).

The support conditions for so vast a hall, with its single span of about 60 ft. internally, relied on good foundations, high-quality ashlar walls nearly 5 ft. thick and massive triangular buttresses, more than 7 ft. thick at their bases, tapered at the top so that maximum light enters the windows. The original porch and façade were demolished in the 17th century and replaced by the smaller neoclassical version seen today (Dormois 1852). The ward and chapel survive but without their original glass and furnishings; however, the monumental 13th-century carpentry remains virtually unaltered.

On the interior, the vault dominates, and its scale and simplicity contrast with and highlight the decorative window tracery of the axial chapel framed by a great semicircular arch (Fig. 14). Originally, all of the windows had both plain and colored glass, and traces of the heraldic frieze at the top of the walls have recently been recovered. The framing is entirely of finely hewn oak, and the roof was originally covered with 4500 sq. meters of glazed tiles, perhaps resembling the polychrome tiles seen in the restored Hôtel Dieu at Beaune built a century and a half later.

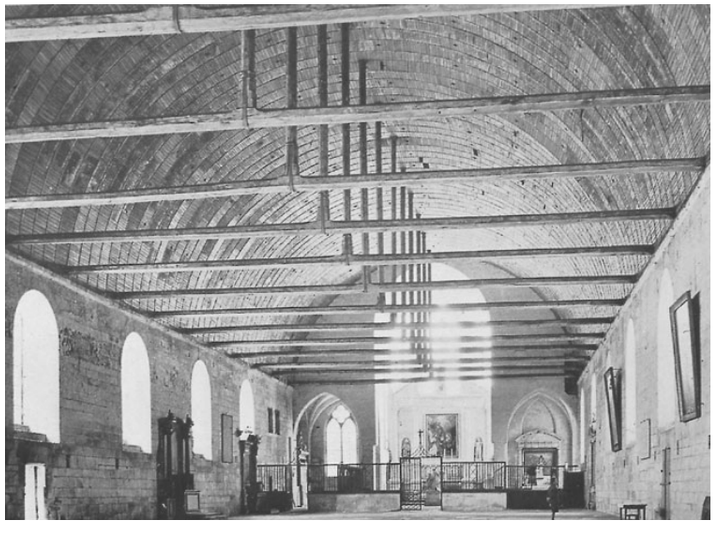

Fig. 14. The open ward of the Maison Dieu, with clear span and height to top of vault both about 60 ft.; design is based on equilateral triangle.

The framing at Tonnerre was studied by Viollet-le-Duc, and later by Henri Deneux, whose model is in Paris at the Centre de Recherche des Monuments Historiques (Fig. 15). In the hospital museum, open to the public, there is a larger scale model built in 1988 by the Compagnons Charpentiers du Tour de France.

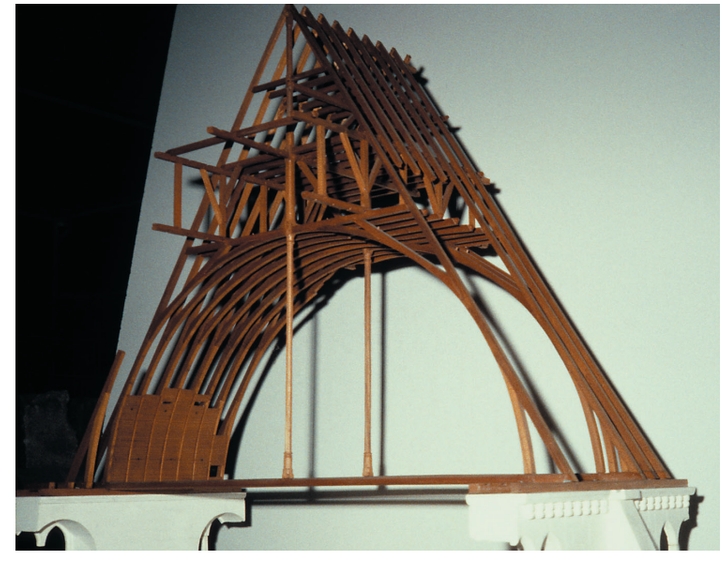

Fig. 15. Deneux's model (CRMH, Paris) of Tonnerre's roof framing. Height of vault is about 30 ft. Common rafter frames stand on 32-in. centers with ties at every fifth frame. Tapered, unscarfed rafters are 63 ft. long, 6x7 at the ridge and 8x10 at the plates.

The chamfered tie beams measure nearly 69 ft. long, but the cross-sectional dimension is a scant 12x12 in., for a slenderness ratio of about 1:69 for the ties! When one subtracts the support given to the tie beams by the wall, the internal clear span is about 60 ft. The ties occur at every fifth frame, with the four intervening common rafter couples spaced 32 in. center to center. The rafters are unscarfed timbers (exceptional) 63 ft. long, 6 x 7 in. (breadth by depth) in section at the ridge and 8 x 10 in. at the wall plates. The common rafters are of the same scantling as the primary truss rafters, and thus produce a uniform-section roof essentially without bays.

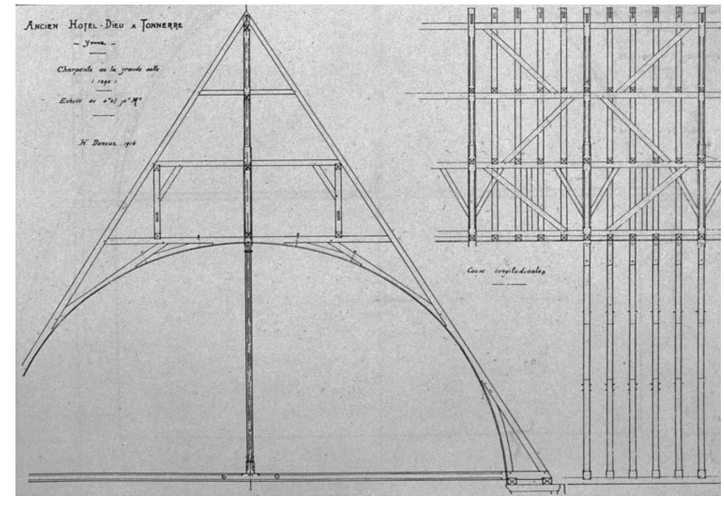

Fig. 16. Transverse and longitudinal sections (the latter from the interior) of the roof of the Maison Dieu at Tonnerre illustrating the tie beam truss with two upper collars and axial members framed into the hung kingpost. The rafters of uniform scantling are braced to form the profile of the semi-circular arch to which the timber panels are nailed. Section (D. 6990, 1916), by H. Deneux, CRMH, Paris.

The hung kingposts are octagonal and chamfered, thus slightly reducing their box-heart section, but the complete scantling and flat face have been retained for assembly purposes, as seen at the junction with the tie beam and at the joints of transverse members above the vault. The transition from square to octagon is especially elegant at the base of the hanger, reinforced with an iron strap (date of the ironwork unknown). Similarly, for symmetry, aesthetic preference and perhaps a desire to reduce the overall weight of the timber, the tie beams are reduced in section to the right and left of the joining with the hung posts (Fig. 17).

The roof above the vault (Figs. 15 and 16) receives lengthwise support from the ridgepiece and the axial plates located in the vertical plane of the hung kingpost. Diagonal struts along the axis of the hanger augment the longitudinal bracing. There are also two side purlins placed between the first and second collars. The joints are primarily mortise and tenon.

The visible *charpente lambrissée* is formed by the addition of four curved braces. The vault surface (Fig. 17) comprises fitted riven panels (*lames*) tapered on one side and thus triangular in cross section. Each panel spans the distance between the common rafter couples, about 26 in., and is nailed to the common rafter. A projecting molding or *couvre-joint* hides the nailed ends of the panels, joined to one another by tongue and groove. In the 19th century, Viollet-le-Duc drew these panels and carefully recorded the ventilation openings cut in the shape of quatrefoils (Viollet-le-Duc 1862, VI, 111).

Returning to Deneux's model (Fig. 15), one can appreciate the tripartite proportions of wall, vault and roof of essentially equal heights (about 30 ft. each). The roughly 2:1 ratio of timber to masonry is reminiscent of medieval barns (compare Ter Doest in TF 62). At Tonnerre, whose architecture may have been influenced by nearby Cistercian abbeys such as Pontigny, the form of an equilateral triangle appears to have been part of the design geometry. Unlike the vast roofs of barns, however, it is not storage capacity that is sought from the triangle but an abundance of air and space. The hospital, when active, must have been a most exceptional interior for those who entered the ward but found cozier quarters in their timber-framed alcoves and well-furnished beds.

Physically, the interior extends to two-thirds of the height of the building. The tied trusses and abutments permit the large windows to be placed high on the walls between the tapered buttresses, thus admitting more sunlight. The resulting light gain in the larger space at Tonnerre can be contrasted to the Byloke infirmary (Fig. 8) where the heavy short principals extend down the wall and the windows are placed proportionally lower. In Tonnerre's brilliantly designed interior, the master carpenter not only provided ample light but also space for an internal timber gallery originally at window level above the former alcoves for the beds (large wall sockets for the gallery braces still remain). The louvered windows of the ward were easily accessible for opening and closing by the attending sisters who reached them from the gallery. By such careful planning, staff and patients were accommodated in an efficient manner in keeping with medical practice of the period.

The air space above the vault and the ventilation openings provided in the surface allowed for the elimination of condensation and enhanced the breathing ability of the entire building. These factors no doubt account for the exceptional preservation of the roof. Perhaps the environmental properties of wood led to a preference for such vaults, despite the inherent dangers of fire. Clearly institutional patrons had other technically viable options as seen, for example, in the aisled stone-vaulted infirmaries at Ourscamp Abbey and the Hospital of St. Jean in Angers.

Today, the open ward at Tonnerre may seem barren and cold, but originally it would have been well furnished. However, unlike aristocratic halls, chambers and the snug interiors seen in medieval manuscripts, there were no fireplaces or open hearths. The inmates and the sisters who served them depended on warmth from sunlight and portable braziers to provide sufficient heat in the individual cubicles that originally lined the walls. Nonetheless, the interior would have been visually far more colorful and hence psychologically warmer with its yellow ochre walls, painted heraldic frieze and especially the colored as well as clear light entering from the large windows that illuminated the great expanse of warm-hued timber above.

Fig. 17. Tonnerre, kingpost and tie beam assembly with vault paneling (some restored). Each panel spans about 26 in. of the vault surface.

Discovering to what extent the wooden vault acted as an acoustical shell to reflect and modulate the sound of the liturgical services needs further research. I suggest, however, that the properties of wood in this respect were not lost on the hospital's patron and designers, since Marguerite's statutes in the Foundation Charter explicitly state that the chaplains and choir boys must sing in a loud voice so that the mass and canonical hours could be heard by those confined to their beds in the infirmary (Challe 1875, 203-220).

As the greatest surviving example of medieval *charpente lambrissée,* the infirmary hall at Tonnerre illustrates how a spacious and decorative interior without aisles could be produced from a combination of the tie beam truss and paneled vault. A hall on such a grand scale firmly demonstrates the technical expertise of master carpenters in achieving exceptional spans unequaled in contemporary masonry construction. On the other hand, numerous examples of lesser scale, including depictions of medieval interiors in the visual arts, indicate the versatility of this important hybrid form that has received scant attention from architectural historians. Sufficient evidence remains, however, to place *charpente lambrissée* in the mainstream of medieval architectural development and to suggest that social prestige, structural adaptability and the spatial advantages it offered account for its widespread popularity in both domestic and ecclesiastical architecture.

—Lynn T. Courtenay, FSA

Lynn Courtenay (ltcourte@facstaff.wisc.edu), MA, PhD, Fellow of the Society of Antiquaries (London) and a scholar of medieval carpentry and northern European architecture, taught history of art at the University of Wisconsin-Whitewater from 1984-2000 and is past president of AVISTA, the international organization that fosters cross-disciplinary exchange in medieval studies (www.avista.org). As a private scholar, she divides her time between the US and the UK, where she continues her research and teaches a short course module in medieval archaeology at the University of York. She has lectured widely and published numerous definitive articles on medieval timber construction and engineering. This essay is adapted from her talk to the Guild last October at the Château Montebello in Québec.

HISTORIC AMERICAN ROOF TRUSSES

III. Kingpost Trusses

THIS article is third in a series to discuss and illustrate the form, function and joinery of American timber-framed roof trusses of the past, showing typical examples with variations. The series was developed from original research under a grant from the National Park Service and the National Center for Preservation Technology and Training. Its contents are solely the responsibility of the authors and do not represent the official position of the NPS or the NCPTT. Previous articles in the series have treated Scissor Trusses (TF 69) and Queenpost Trusses (TF 71). The final article to appear in TIMBER FRAMING will treat Composite Trusses.

THE kingpost is likely the earliest truss form. Its evolution has been sketched by numerous authors, who cite ancient examples thought to predate other truss types and who speculate knowledgeably how a builder might first try to span a great chamber. As in any other study of a particular object of material culture, we are limited to examining as many as we can of the surviving examples, which represent only a tiny fraction of the roof frames built in the past. In addition, we can look at old drawings and read ancient commentary, sometimes written by architects but rarely if ever by actual framers. Within these limits it is still possible to discover something.

As soon as we exceed about 40 ft. of clear span, even the largest timber, of the highest quality, of the best species, will sag under its own weight if used as a tie beam, and the even-longer rafters above it will both sag and put great outward pressure on the exterior walls. The outward pressure on the walls can be mitigated by supporting the rafters at their peaks by a ridge or purlin supported on posts bearing on the tie beams (Fig. 1a). Such roof frames were common in Europe during the Middle Ages, examples of which survive, and possibly during Antiquity, where examples don't. But, unless the span is short and the tie beam stout, this configuration will just depress the tie and allow the rafters to deform anyway.

Outward pressure on the walls can be eliminated entirely by affixing the feet of each rafter couple to their own tie beam. The problem of sag can then be addressed by hanging a joggled vertical member, or kingpost, from these rafters and using it in tension to support the midspan of the tie beam. (Fig. 1b). By a less obvious intuitive leap, it might be realized that the midspan of the long rafters can be kept from bending by struts rising from lower joggles on the suspended kingpost (Fig. 1c).

Looking back, we hypothesize that successive highly experienced framers with good structural intuition developed a frame where loading was axial, forces were balanced or balanceable by a none-too-thick wall below and triangulation with fixed joints was achieved. This was the truss and, at first, probably a kingpost truss. It evolved in Europe or in the Mediterranean region and apparently did not develop independently elsewhere, even in the highly sophisticated timber framing traditions of China or Japan.

Early examples from the Roman Empire exist as written accounts of public buildings with clear spans as great as 90 ft. (necessitating a truss), or suggestive early illustrations of framing with abundant triangulation, such as those found on Trajan's column shown below.

C. Chicorius, 1904

Panel from Trajan's column depicting Apollodorus's bridge (ca. 105) across the Danube. Trussed segmental arches spring from triangulated supports to carry the bridge deck. Triangulated railings may help.

Ancient roof systems that survived into the 19th century, such as the 78-ft.-span kingpost trusses at St. Paul's Outside the Walls, in Rome, represented three different periods of construction between the 4th and 15th centuries, and extensive repairs (Fig. 2 facing page). However, at least two observers (Gwilt 1867 and Rondelet 1881), while dating the trusses differently, agree that the kingpost was suspended and had tension joinery at its intersection with the tie beam.

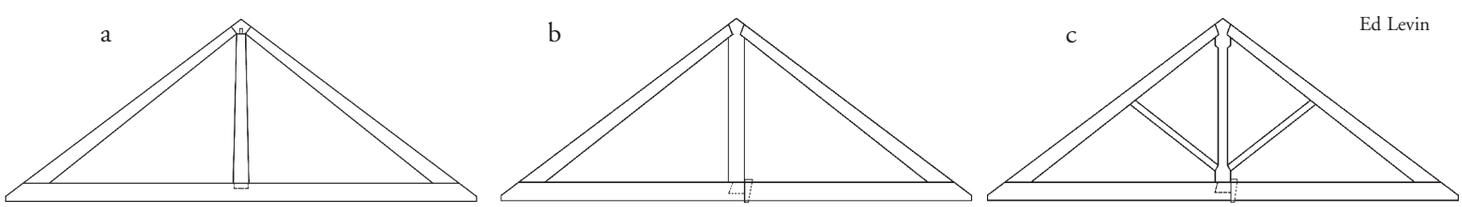

FIG. 1. HYPOTHETICAL DEVELOPMENT OF KINGPOST TRUSS: (A) CROWNPOST SUPPORTING RIDGE, (B) HUNG KINGPOST, (C) STRUTTED RAFTERS.

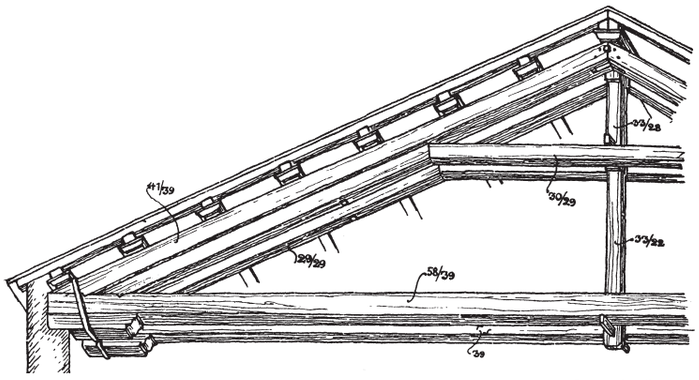

Ostendorf, 1908

FIG. 2. OSTENDORF'S DRAWING AFTER RONDELET'S OF THE KINGPOST TRUSS OF ST. PAUL'S OUTSIDE THE WALLS, BEGUN CA. 384-86, REPAIRED IN THE 9TH CENTURY AND DESTROYED BY FIRE IN 1823.

The mid-6th-century roof truss at the Monastery of St. Catherine at Mount Sinai, Egypt, is our oldest securely dated extant example. It is a kingpost variation known in England as kingpendant, i.e., the pendant kingpost doesn't reach or suspend the tie beam, in this case because the roughly 20-ft. span doesn't require midspan support (Fig. 3).

The great Gothic cathedral of Notre Dame in Paris (roof system ca. 1200) contains complex frames with kingpost-like elements supported by pairs of principal rafters, but their functioning as a truss is complicated by the existence of what Gwilt calls queen stirrups, that is, wooden suspension members to either side of the kingpost that are hung from both upper and lower collar beams that span between the upper principal rafters (see Fig. 2, page 8).

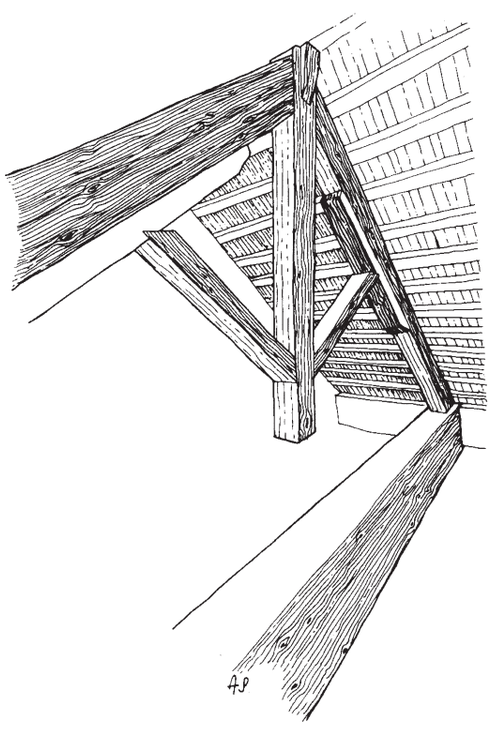

Amy Stein

FIG. 3. KINGPOST TRUSS INSIDE THE NAVE OF THE 6TH-CENTURY MONASTERY ST. CATHERINE'S AT MOUNT SINAI IN EGYPT.

These queen members are described by Gwilt as having somewhat more substantial tension connections at the tie beam than does the kingpost; they are understood by Courtenay to have been installed to support work platforms for the masons and their materials in building the vaults below (Fig. 2, page 8 and Courtenay 1997).

This complex and indeterminate framing is often successful, not because clear load paths exist as in the case of a truss, but because experienced framers knowing the properties of their wood species and executing appropriate joinery at a multitude of locations were confident that they could design a rigid and enduring roof frame. This old complex framing was common even in the prestigious buildings of the 18th century and continued to be used by vernacular builders in rural America during the early 19th century, long after builders' guides and patented plans describing the details of truss construction were readily available. Some of these complex roof frames and truss variants will be described in the fourth part of this series.

By the 16th century, illustrations of trusses and more-or-less modern discussions of their behavior were available in numerous Italian publications and, by the early 17th century, such trusses were being built and written about in England as well. In Italy, the truss was called *trabo reticulari* or "beam in the form of a net," not unlike some modern engineers' descriptions of trusses as having chords and a web (Yeomans 1992). In 1678, Moxon's *Mechanick Exercises* illustrates a fully developed kingpost truss with a flared head and struts rising from joggles on the kingpost to the midpoint of the rafters—but, inexplicably, over a fully studded gable wall in an otherwise common rafter roof (Fig. 4).

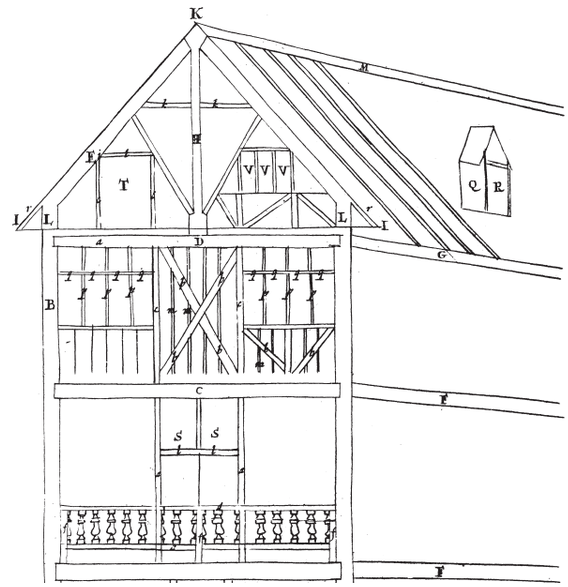

FIG. 4. MOXON'S DRAWING OF A KINGPOST TRUSS, 1687, DETAIL. POSITION OF TRUSS OVER FULLY STUDDED GABLE WALL MAY ALLOW PRESENTING NORMALLY DISPARATE ELEMENTS IN ONE DRAWING.

Moxon does use the word truss and refers the reader to sections on kingpiece or joggle piece for explication. (For the English etymology of the word *truss*, see the first article in this series in TF 69.) The 1681 Old Ship Meetinghouse in Hingham, Massachusetts, employs the oldest extant American example of a kingpost truss, although in a roof system of unusual form. Kingpost truss roof systems (and other truss form systems in lesser numbers) were built sporadically during the first half of the 18th century, but then by the tens of thousands during the later 18th and throughout the 19th centuries, by vernacular carpenters framing meetinghouses, churches, public buildings and bridges all over eastern North America.

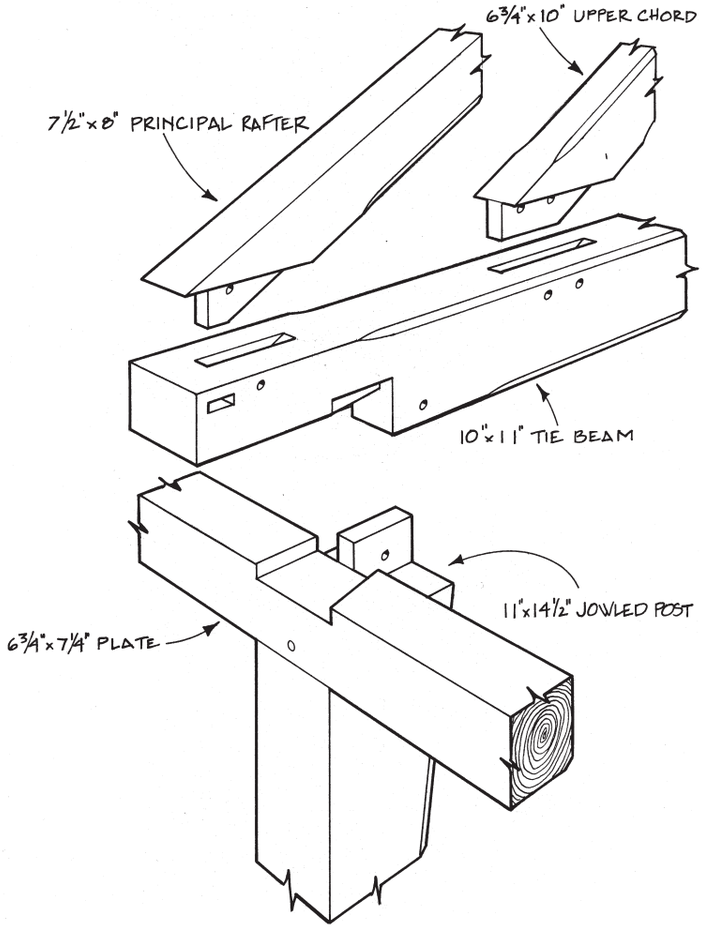

At least three reasons account for this explosion of truss construction in the New World. One was the increased availability of builders guides that explicated and advocated timber truss work (Nicholson 1837 and Benjamin 1839). A second was the availability of large and long timber that lent itself to truss construction, particularly with kingposts. (The old complex framing could be accomplished with a multitude of smaller members, accommodating what timber was ordinarily available in medieval Europe.) A third reason was the increased popularity of a sort of neoclassical architectural design, even in rural areas, that used white painted timber to represent masonry construction and took pains to eliminate any exposed framing. This style also emphasized wide, open audience rooms under relatively low roof pitches and, in consequence, increasingly eschewed the aisled and galleried constructions, associated with outmoded political and social systems, that lent structural support to the nontrussed roof systems.

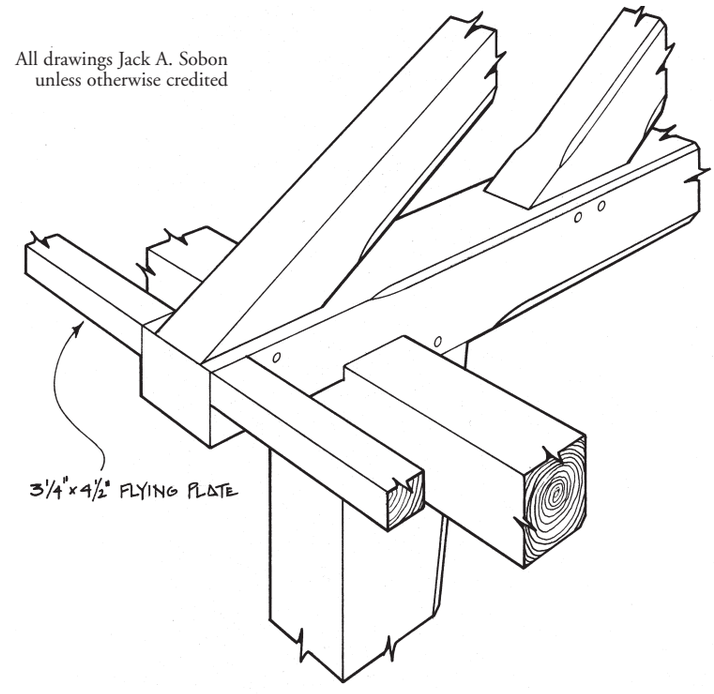

FIG. 6. RAFTER, TIE AND PLATE JOINTS, LYNNFIELD MEETINGHOUSE, AN ENGLISH TYING JOINT WITH OUTSHOT PLATE.

Lynnfield Meetinghouse, Lynnfield Center, Mass., 1714. The frame at Lynnfield originally measured 32 ft. 4 in. wide and 38 ft. long. Jowled wall posts, exposed to the interior, supported two kingpost trusses, framed entirely of oak. These trusses used naturally curved inner principal rafters to trap and support a gently tapering kingpost with a wedged, blind half-dovetail joint at its foot supporting the midspan of the tie. Outer principal rafters rising from the cantilevered ends of the 35-ft. tie beams tenoned into the slightly flared head of the kingpost and were supported at their midspan by short struts rising from the arching inner rafters. Large curved braces rose from elongated mortises on the flared posts to long, three-pin mortises on the ties, to help support the inner rafters where they bore on the tie beam inboard of the post (Figs. 5, 6).

In 1782, using a typical method of the time for enlarging buildings, the structure was sawn in half and spread apart. Sections of sidewall, roof and two new trusses, similar but not identical to the old ones, were installed in the middle, bringing the building to its current length of 57 ft. The two new trusses were different in several details, representing both changes in architectural taste and availability of materials. The kingposts remained oak but the tie beam and rafters became pine. The inner rafters were still slightly

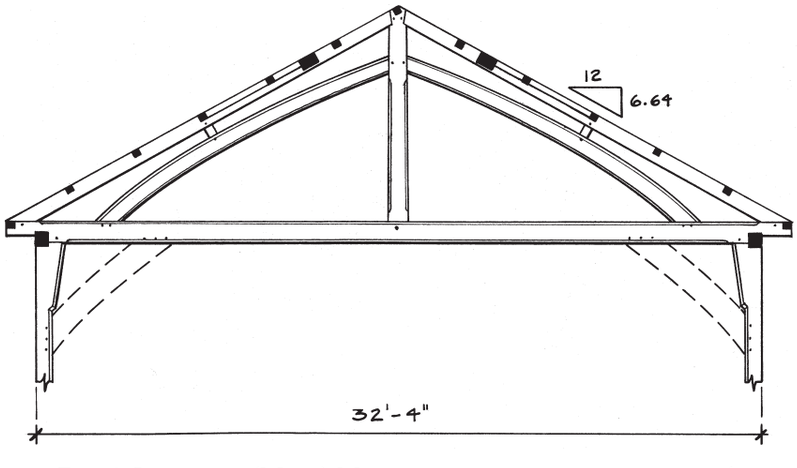

FIG. 5. LYNNFIELD (MASS.) MEETINGHOUSE ORIGINAL TRUSS, 1714.

Lynnfield exterior is austere and without tower.

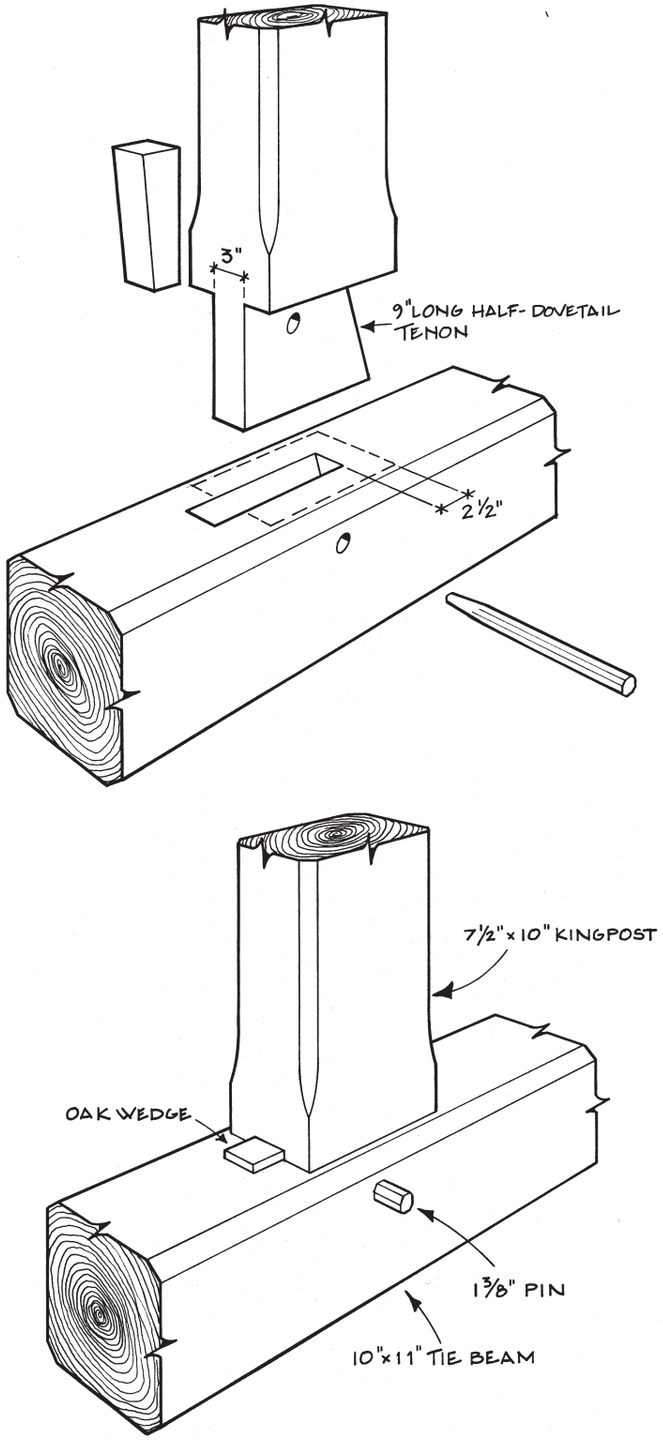

FIG. 7. KINGPOST-TO-TIE JOINT, ASSEMBLED AND EXPLODED VIEWS, LYNNFIELD MEETINGHOUSE. ORIGINAL TRUSSES ARE ENTIRELY OAK; LATER ONES USE PINE RAFTERS AND TIE BEAM.

curved, but there was no provision for large curved bracing rising from the wall posts to support them. On the old trusses the wedged half-dovetail at the kingpost-to-tie joint is not in a through mortise, the dovetail has 2½ inches of slope, and it is transfixed by a single 1⅜- in. pin (Fig. 7). On the new trusses the kingpost is not as wide, 8½ in. as opposed to the 10 in. of 1714; the mortise passes through the 10x11 tie beam, the slope of the dovetail is only 1½ inches and it is transfixed by a single ⅞-in. pin. The old trusses are performing better at this joint than the new ones; the explanation may be the crushing of end grain in the mortise in the pine tie, the reduced slope on the dovetail tenon or the relatively small pin—solely or in combination.

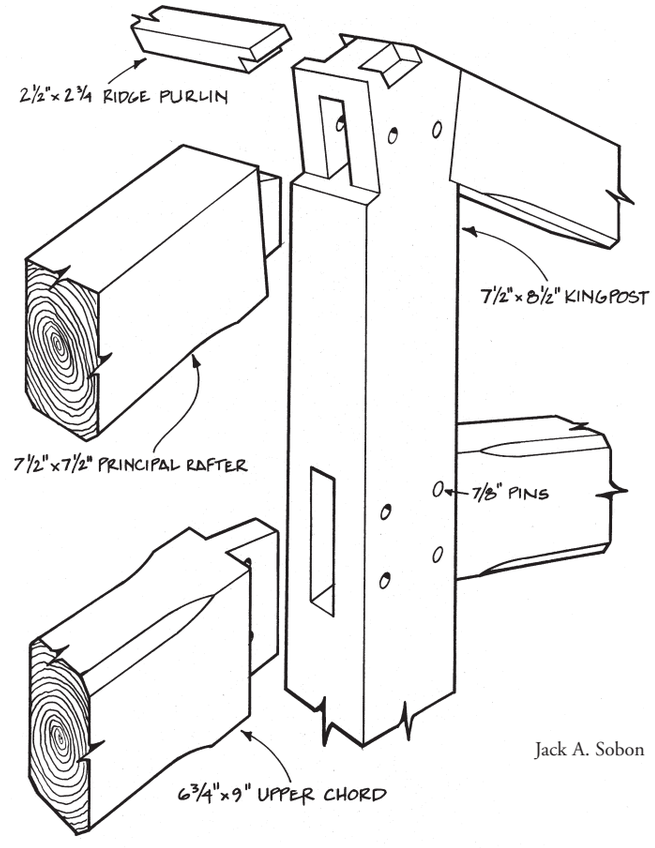

FIG 8. EXPLODED VIEW OF PEAK JOINT, LYNNFIELD MEETINGHOUSE. UPPER TRUSS CHORDS ARE INDEPENDENT OF ROOF RAFTERS.

The old trusses had stopped chamfers cut on the arrises of all major members, absent on the new, perhaps because in 1782 (or in a later remodeling) a plaster and lath ceiling was installed and the wall posts likewise covered. Today the roof system is again exposed.

The new trusses, unlike the old, also have no flared abutments or joggles at the kingpost head (Fig. 8); but if there is anything surprising that our examination of a great many historic trusses has shown, it is that normal bearing or the lack of it at chord-to-kingpost connections results in no truss deformation. The 1801 Windham Congregational Church in Windham, Vermont, with its very heavily built kingpost trusses of 45-ft. span, is just one more example of many whose rafters, both inner and outer, engage the kingpost with no cut joggle of any sort, instead using a 2- or 3-in. tenon with shoulders cut at the roof angle (Fig. 10 below). It may be that the kingpost-to-tie joint is always weaker and that failure will occur there rather than at the head. It may be also that the weight and nailed-together matrix of roof boarding and shingles keep the joint together at the very head of the post.

Another possibility is that when a truss initially bears its load, the end grain at the upper end of principal rafters or braces compresses itself into the side grain of the post, developing enough friction that a smallish tenon with a pin is enough supplemental restraint to provide a rigid joint with no slippage.

The Lynnfield Meetinghouse has all the appealing characteristics of late medieval framing: everything is hewn or hand surfaced, all members either curve or taper slightly and the timber edges are decorated with a nonmechanical sort of easement that widens and narrows with irregularities of the hewn surface. Meant to be exposed, and well protected over time, the trusses have a beautiful patinated color. This roof system is in very good condition, particularly the older trusses.

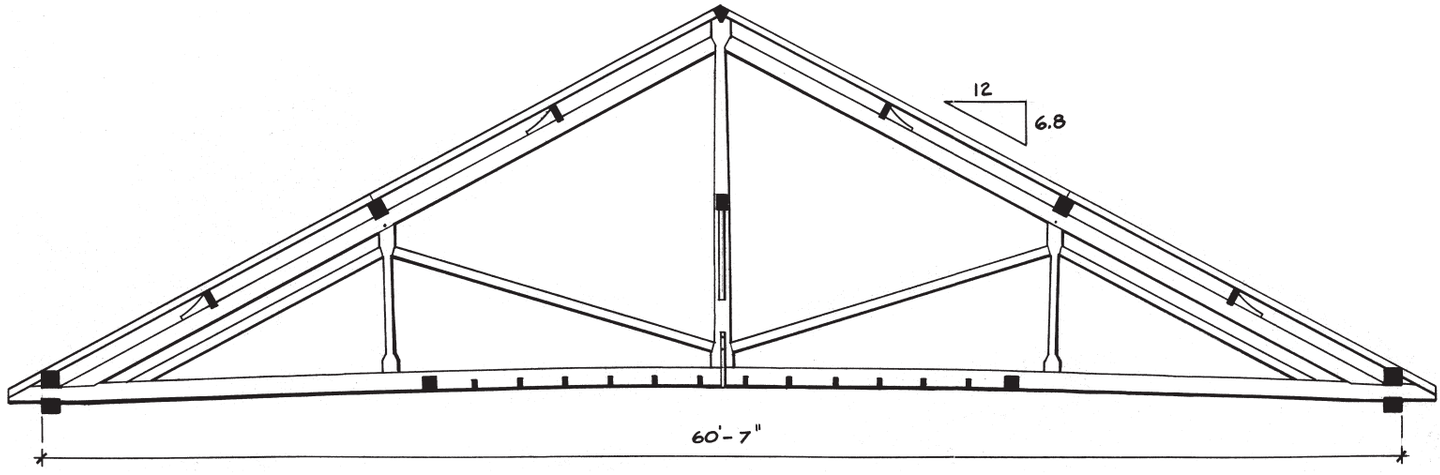

FIG. 9. CASTLETON FEDERATED CHURCH, 1833. LONG-SPAN KINGPOST TRUSSES ARE CONSIDERABLY STRENGTHENED BY PRINCEPOSTS IN TENSION.

Castleton Federated Church, Castleton, Vermont, 1833. Castleton Federated is a large brick church with a timber roof system and a storied steeple that terminates 132 ft. above the ground. The roof is composed of kingpost trusses spaced 10 ft. apart, spanning 59 ft. 1 in. in the clear, with a single-stick 11x11 bottom chord length of 63 ft. 7 in. overall. The trusses are fitted with princeposts (sometimes called queenposts) that flank the kingpost and further divide the span. The chords are not the only long members in the building. The 8½ x 9½ purlins notched over the truss rafters directly above the princeposts are single timbers nearly 70 ft. long (Fig. 9). The pendant mast of the spire, originally a 51-ft. 9x9 chestnut timber, was replaced with an equal-sized stick of pignut hickory in 1989 by the author.

The builder of the church was Thomas Dake, a well-known house joiner of Castleton who designed, framed and notably finished a number of houses still widely admired in that village. Dake's aesthetic sense is revealed in the church roof frame as well, where 6 in. of camber in the tie beam, sizing and shaping of members proportional to load and function, and the dramatic entasis of the kingposts, produced a graceful and eye-pleasing truss. The hemlock kingposts measure 11½ x10 at the bottom and taper, at an increasing rate as they ascend, to measure only 5x10 below the normal joggles for the 8x8 principal rafters. The kingposts extend for another 12 in. above the rafters, providing adequate shear distance for the shoulders and ultimately carrying a notched-in ridgepole for the common rafters.

The truss at Castleton has single principal rafters with three lines of purlins lodged atop the rafters, carrying a deck of 4x4 common rafters. One purlin is the aforementioned large timber above the princeposts, but the other two are lines of 3x9 interrupted timbers sitting against cleats at the approximate quarter points along the principal rafters. The princeposts, which have joggles top and bottom, are correctly supported by low-angled struts, one rising from the lower joggles on the kingpost and the other from a mortise in the bottom chord about 3 ft. inboard of the bearing walls, so that the princeposts suspend the bottom chord as well, rather than bearing upon it. The kingpost suspends the center of the bottom chord with a 2-in. through tenon assisted by an iron strap with 1-in. iron pins, while the princeposts use a mortise and tenon joint with two wooden pins and no ironwork.

This treatment of secondary posts as suspension members, with their own truss work within the larger truss, was not universal in the roof frames of the 18th and 19th centuries. In a typical example, at the Windham Congregational Church (1800), 4x5 struts rise from an unshouldered mortise high on the kingpost to support the inner principal at approximately its upper third point, while

Ken Rower

Castleton Federated, 1833, in Greek Revival style (though with Gothic arched windows), including colonnaded porch; tower is supported by front wall and sleepers over first three trusses.

additional 4x5 raking struts rise from bearings on the bottom chord midway between the kingpost and the wall posts to support the same rafter lower down. Five short struts then rise from this inner rafter, none of them directly over the lower struts, to support the outer principal rafter that carries the purlins for the common rafters and roof deck (Fig. 10 facing page). In a second instance, at the 1826 Newbury, Vermont, Methodist Church, square 8x8 timbers rise from truss chord to principal rafter in a kingpost truss as if awaiting the support of galleries below that were never built.

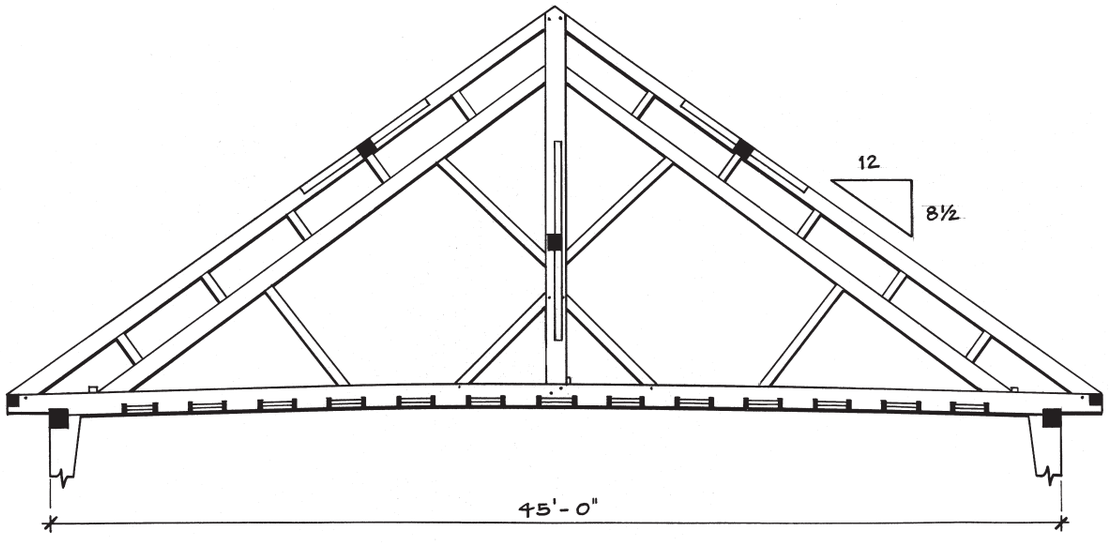

FIG. 10. WINDHAM, VERMONT, CONGREGATIONAL CHURCH,1800. STRUTS AND UPPER CHORDS BEAR ON UNJOGGLED MORTISES.

The Castleton roof system is framed almost entirely in hemlock. The pins are ash, 1⅛-in. diameter in the larger members and ⅞-in. in the smaller. Of interest are the white oak poles woven in between the common and principal rafters toward the front of the church, reaching into the steeple perimeter. These were likely some of the rigging used to build the tall steeple once the roof trusses and roofing were already in place. Also located at the rear of the steeple are braced and now cut off 10x10 posts that probably served as the bottom of the derrick for erecting the steeple or perhaps the trusses themselves. The trusses are functioning well, even carrying some of the steeple load on a pair of sleepers crossing the forward three trusses. Other than small openings at the kingpost-to-tie joints, they show no signs of stress.

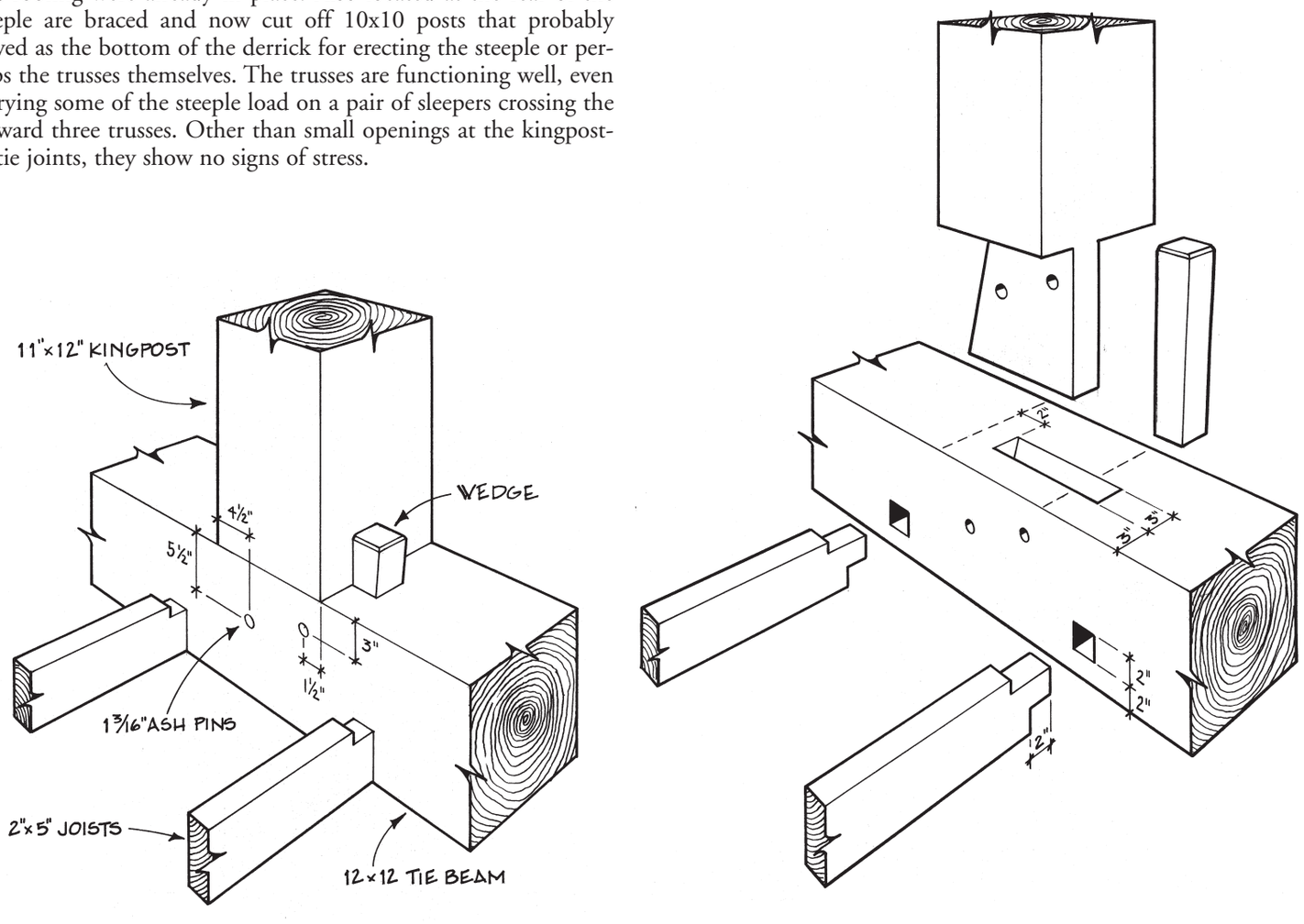

FIG. 11. KINGPOST-TO-TIE JOINT ASSEMBLED AND EXPLODED, WINDHAM CONGREGATIONAL CHURCH, 1800. JOISTS ARE INSERTED AT ONE END AND SWUNG INTO PLACE AT OPPOSITE END VIA PULLEY MORTISES, SEEN IN TRUSS ELEVATION ABOVE.

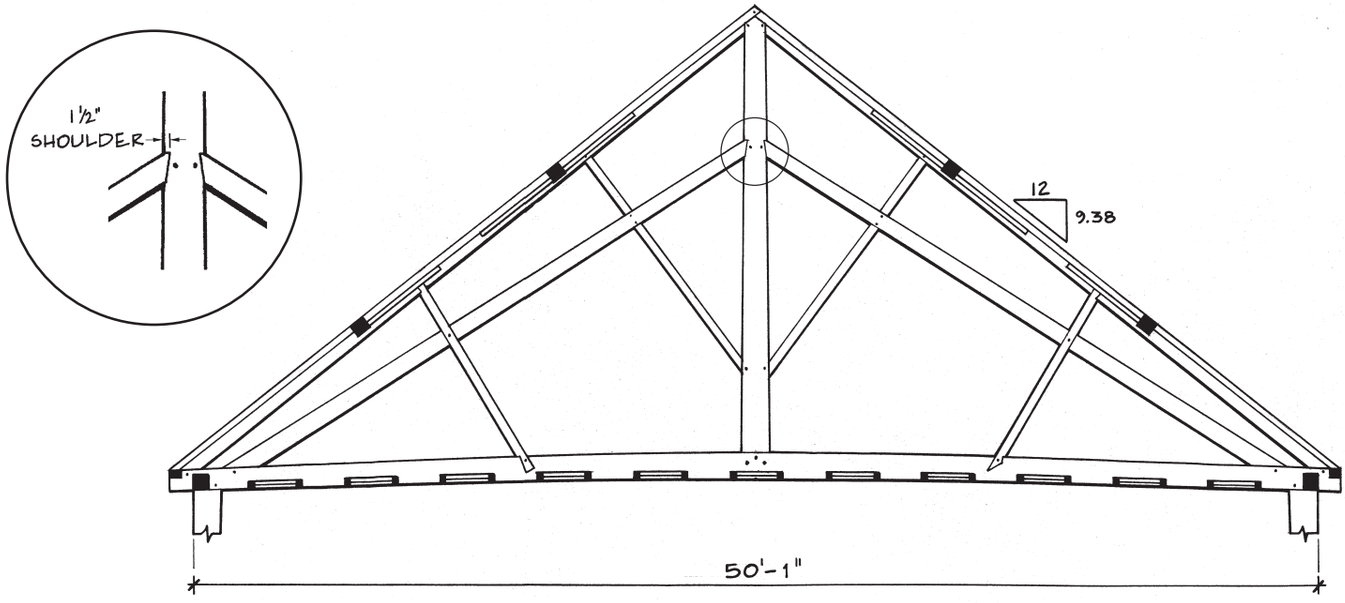

FIG. 12. STRAFFORD, VERMONT, MEETINGHOUSE, 1799, WITH DETAIL OF UPPER CHORD ABUTMENTS.

Strafford Meetinghouse, Strafford, Vermont, 1799. Strafford is a late example of an older style of New England meetinghouse, with a plain exterior little influenced by classicism and a steeple rising from the ground at one gable wall rather than engaged with the body of the building atop a portico, as was already stylish at the time. The roof is steep, pitched 9½ over 12, and its trusses, framed by the scribe rule, are monumental and complex: the span is 50 ft. 1 in. and the height of the kingposts themselves 22 ft. Bay spacing is slightly irregular within several inches at around 12 ft., with no two (of five) bays identical. The hewn bottom chords, principal rafters, kingposts and plates are spruce, while the vertically sawn braces, struts, joists, common rafters, purlins and flying plates are hardwood: a mixture of beech, yellow birch and maple (Fig. 12).

The 12x14 bottom chords show, variously, 5 to 7 inches of camber. An 11x14 kingpost rises from a three-pinned through tenon at the bottom chord to measure 10x11 at the peak. The inner rafters taper from 7½x10 at the bottom to 7x7 at the top, and tenon into the kingpost with 1½-in. bearing shoulders, indicating that these members were intended to be the top chords of the truss (Fig. 12 detail). The outer rafters measure 9x10 at the bottom and again taper toward the top where they are tenoned and pinned, without flared shoulders and with very little relish, into the top of the kingpost. These outer rafters carry the two lines of 8x9 purlins, and consequently the 3x5 common rafters and the roof deck, the weight of which helps keep them in place. The inner rafters, providing main support for the kingpost, bear on the bottom chord right over the inner edge of the wall posts. The outer rafters bear at the very ends of the bottom chord with very little relish (Fig. 13). In four cases this short relish has failed in double shear, a result of the innate vulnerability of the joint and the unfortunate addition of slate roofing on a frame designed for wood shingles; these four joints are now restrained with steel bolts.

The inner and outer rafters are not parallel. The inner ones have a lower pitch and are thus shorter and potentially more resistant to buckling. However, this choice of inner rafters as the important top chord of the truss, unattached to horizontal purlins or the weight and diaphragm of the roof, leaves them vulnerable to buckling under load. The framers at Strafford tried to deal with this problem by adding supplemental struts and a raking strut to each side of the truss, but with only partial success. The supplemental struts are more or less typical, 4x4s rising from an unjoggled mortise in the post at a steep angle and tenoning into the inner rafters at about their upper quarter points. Further short supplemental struts, tenoned and pinned, rise on the opposite faces of the inner rafters to support the outer rafters near, but not under, the 8x9 purlin joints.

Ken Rower

Strafford Meetinghouse, 1799, modest and chaste except for its proud octagonal steeple over a square clock tower.

The intellectual genesis and the function of the raking strut are harder to understand. A hardwood 4x4 springing from about the quarter point of the bottom chord to a point nearly two-fifths up the outer rafter, it has half-dovetail laps at both ends, suggesting an attempt to suspend the bottom chord from above, or perhaps

restrain the outer rafter from upward buckling or outward slippage (photo below). Crucial to understanding the framer's thought is the halving and tight trenching of the 4x4 where it crosses the inner rafter and is fastened as well by a 1⅛-in. pin. The joinery suggests the raking strut is to help the inner rafter resist buckling, adequate in an upward direction but a marginal construct against horizontal buckling. On the Strafford trusses, several inner rafters have buckled outward, away from their joints with this raking strut, or have bent or even broken the member when a rafter elected to buckle toward one already weakened by excessive slope of grain. The half-dovetails on the raking struts also have bearing shoulders that can work in compression to help the outer rafters bear the lower 8x9 purlins. That is what the raking struts seem to be doing at this point in the life of the trusses even though the purlin bearings are 2½ ft. away.

In an unusual arrangement, the Strafford roof framing includes floor-level 4x7 horizontal braces that tenon into the sides of the tie beams, notch over the plates and tenon into the sides of the 4x6 flying plates to help support them near their midspan (photo below).

The Strafford trusses are generally performing well at more than 200 years of age, sagging a bit due to the weight of slate but profiting from not having to bear any steeple loading thanks to the appended rather than dependent steeple.

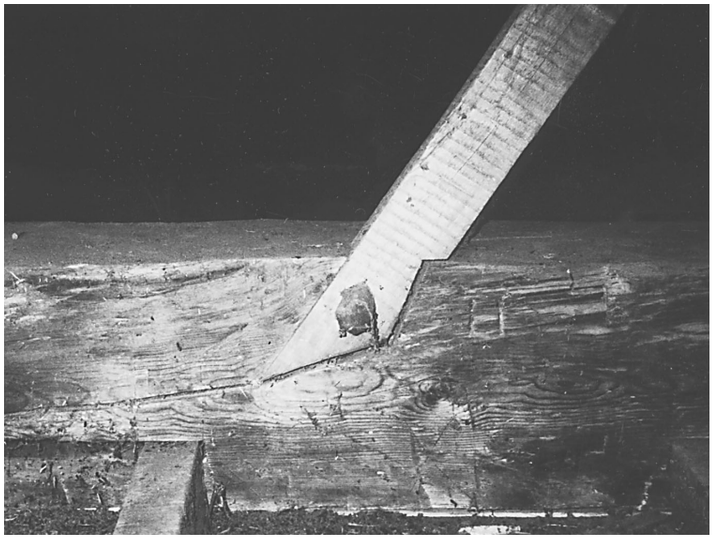

Jack A. Sobon

At top, pinned dovetail lap at lower end of raking strut connecting tie beam with upper rafter at Strafford. Above, brace that helps support the interrupted flying plate spanning from tie beam to tie beam.

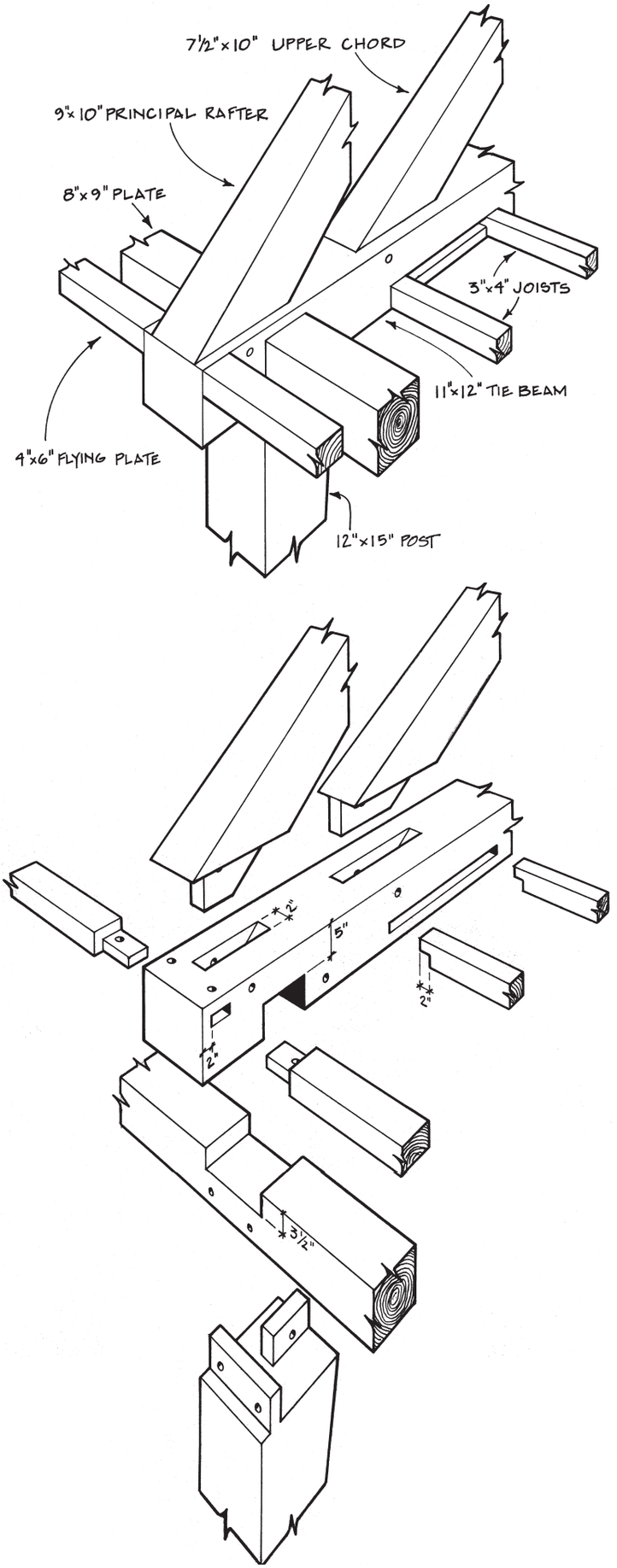

FIG. 13. STRAFFORD MEETINGHOUSE, ASSEMBLED AND EXPLODED VIEWS OF TYING JOINT WITH UPPER CHORD SEATS.

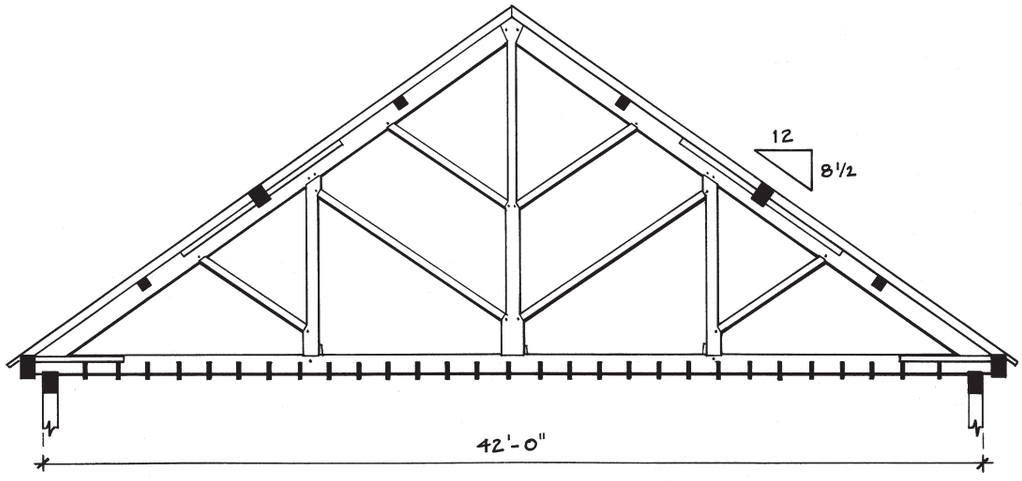

FIG. 14. UNION MEETINGHOUSE, 1870, APPARENTLY CLOSELY PATTERNED AFTER THE BUILDER'S GUIDE DRAWING BELOW.

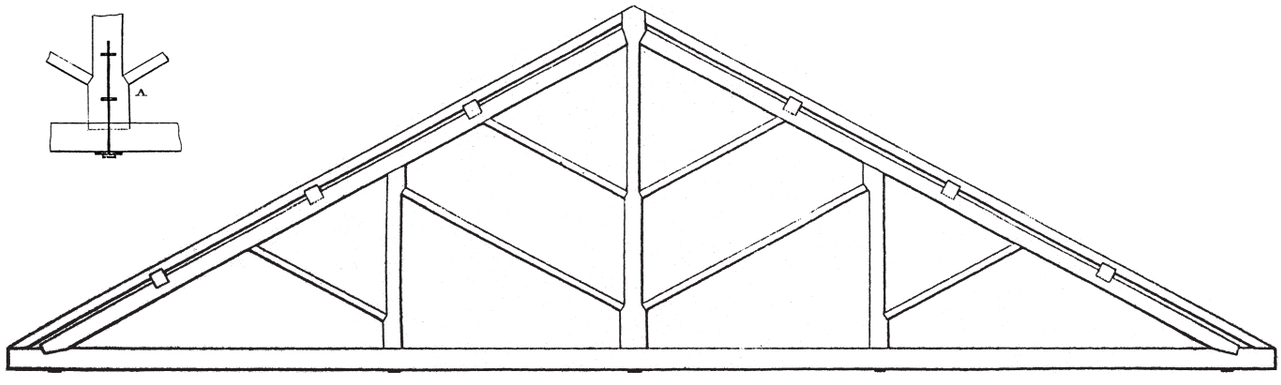

FIG. 15. ASHER BENJAMIN'S DRAWING OF A KINGPOST TRUSS WITH "QUEENPOSTS," PUBLISHED IN HIS *PRACTICAL HOUSE CARPENTER,* 1839. DETAIL SHOWS METHOD OF FASTENING POSTS WITH VERTICAL BOLTS THROUGH TIE BEAM TO CAPTIVE NUTS SUNKEN IN THE POSTS.

Union Meetinghouse, Huntington, Vermont, 1870. The kingpost truss with princeposts at the Union Meetinghouse spans 41 ft. 8 in. in the clear with the bottom chord 44 ft. long overall (Fig. 14). This truss is an example of the persistence of good design; it is nearly identical to one shown on Plate 54 of Asher Benjamin's *Practical House Carpenter* (Benjamin 1839), which he describes (p. 78) as "very ancient, strong and simple . . . and the best constructed plan of any now in use" (Fig. 15). Union's unusual feature, which suggests direct copying from the pattern book, is the double-strutted kingpost, from which one pair of struts rises to the approximate upper quarter point of the rafter while a lower pair rises to brace the head of the princeposts (or queenposts in Benjamin's terminology). Each pair of struts rises from its own set of joggles on the kingpost, diminishing the kingpost twice until it is only 4½x8 before flaring to near-perpendicular bearing at the heads of the rafters.

In spite of Benjamin's assertion that this truss is of ancient lineage, the double strutting from double joggles is rare in practice or in the literature surveyed. There are minor departures in joinery between Benjamin and the Huntington truss. Benjamin, in 1839, recommends using the then-modern center drilled bolt to join the kingpost with the bottom chord. In this system, a long hole is drilled up through the end grain of the post, arriving at a square chisel-cut hole where a nut will await the bolt that also passes through the bottom chord (Fig. 15 detail). The possibility of turning or restraining the upper nut is provided by grooves filed in the sides of the square nut that can be hit with a cold chisel. Further, at Huntington, both the king and princes have wedged half-dovetails at their bottom chord joints and, in the case of the trusses helping to support the steeple, the princes are closely paralleled by 1-in. iron rods dropping from the rafters and passing through the bottom chord. The rods may be contemporary with the truss but could also have been installed during the next 50 years with no identifiable difference in their form or manufacture. In addition to the bolt, Benjamin's drawing also provides for a larger wooden shoulder at the principal rafter-to-tie point of bearing than that found in the Union Meetinghouse.

While the Union Meetinghouse truss appears similar to the Castleton Federated truss, Castleton's support of the princeposts is more fully realized: the latter are trussed themselves by struts, serving as small main braces, rising from kingpost and bottom chord on opposing sides (Fig. 9). The difference may be attributed to Castleton's greater span. At Huntington, the princes are strutted from the kingpost but depend on a shoulder and pins at their junction with the principal rafter to resist movement toward the eaves as the princes are pushed and pulled downward. Meanwhile, a strut rises from a joggle at the foot of the princeposts at Huntington to support the rafter at its lower quarter point, while the head of the prince supports the rafter near its middle. As is often the case in traditional framing, the purlin loads are not supported by posts or struts directly under them, so as to avoid weakening the principal rafters by excessive joinery at any one point.

A steeple rises from the front end of the Union Meetinghouse, the corner posts of its lower stage resting on sleeper beams that cross the front eaves plate and two successive truss bottom chords (ties). At the nearer truss, the load at the rear of the steeple has

forced the shoulders to open a small amount at the post-to-tie joints. Any dovetail joint, particularly if fixed with but one pin, will be subject to deformation under load since its main source of resistance is the relatively weak side grain compression on the edge of the tail. The increasing density of the compressing material on the edges of the tail eventually brings this to a halt. In addition, the iron rods paralleling the princeposts at Huntington can carry all the tension at the joint, even though they stretch a bit and their washers indent the side grain of the rafters and chords where they bear.

The concerns of modern engineers contemplating the reuse of the building led to the introduction of a supplementary steel truss at the rear of the Huntington steeple. Fortunately, concerned preservationists involved in the project kept the new truss independent and nondestructive of the historic truss. This process of underpinning or overlaying the historic with the modern is not new. Patrick Hoffsummer illustrates a nave roof at Liege in Belgium composed of 12th-century collared rafter frames largely deprived of function when sistered by late 17th-century kingpost trusses little different from those we have been discussing (Hoffsummer 2002, 103). —Jan Lewandoski

Jan Lewandoski of Restoration and Traditional Building in Stannard, Vermont (janlrt@sover.net), has examined hundreds of church attics and steeples. As co-investigators for the historic truss series, Ed Levin, Ken Rower and Jack Sobon contributed research and advice for this article.

Bibliography

Benjamin, Asher, *The Practical House Carpenter,* Boston, 1839.

Brunskill, R.W., *Timber Building in Britain,* London, 1985.

Courtenay, Lynn T., "Scale and Scantling: Technological Issues in Large-Scale Timberwork of the High Middle Ages." Eliz. B. Smith and M. Wolfe, eds., *Technology and Resource Use in Medieval Europe, Cathedrals, the Mills and Mines,* Aldershot, UK, 1997.

Hoffsummer, Patrick et. al., *Les charpentes du xie au xixe siècle, Typologie et évolution en France du Nord et en Belgique,* Paris, 2002.

Gwilt, Joseph, *The Encyclopedia of Architecture,* London, 1867.

Kelly, J.F., *Early Connecticut Meetinghouses,* New York, 1948.

Moxon, Joseph, *Mechanick Exercises*, London, 1793.

Nicholson, Peter, *The Carpenter's New Guide,* Philadelphia, 1837.

Palladio, Andrea, *The Four Books of Architecture,* London, 1738.

Rondelet, Jean Baptiste, *Traité théorique et pratique de l'art de bâtir,* Paris, 1881.

Yeomans, David, *The Trussed Roof,* Aldershot, UK, 1992.

_____, "A Preliminary Study of 'English' Roofs in Colonial America," *APT Bulletin,* XIII, No. 4, 1981.

Huntington, upper part of truss with strutted princepost. Wind-braced principal purlins overlap the upper chords and connect the trusses.

Photos Ken Rower

Union Meetinghouse, Huntington, Vermont, 1870, finished in late neoclassical style, now converted to a public library.

Lower part of truss. Toe-nailed 2x8 joists pass under the tie beams to set lath 2 in. below ties. Long-serving tension joints have been reinforced.

Port Orford cedar, Curry County, Oregon

Trees selectively harvested.
Timbers sawn to your specifications.

EAST FORK LUMBER CO., INC.
P.O. Box 275 • Myrtle Point, Oregon 97458
Tel. 541-572-5732 • Fax 541-572-2727 • eflc@uci.net

CUSTOM TIMBER PACKAGES

Southern Yellow Pine
You can have it all - strength, beauty and affordability

Forest Salvaged Standing Dead Douglas-Fir
Sometimes Being Dead can be a Good Thing

Other Species Available
From White Oak to Reclaimed to Rounds to the unusual, give us a call, chances are we can get it for you.

QUICK QUOTE TURN-AROUND • SHORT LEAD TIMES • HIGH QUALITY TIMBERS • PERSONAL SERVICE

CLARK'S FORK TIMBER

New York Office
Phone (585) 243-2795
Fax (585) 243-5036

South Carolina Office
Phone (864) 898-1655
Fax (864) 898-1675

www.clarksforktimber.com

Supplying timbers for over 20 years

Custom Cut Timbers

Clears / STK / #1 Structural

Douglas fir • Western Red Cedar • AYC

random or specified lengths • other grades available

We will quote any timber inquiry, no matter how unusual.

Cowichan Lumber Ltd.

North Vancouver, BC, Canada
800-918-9119

Hull Forest Products, Inc.

Sustainable forestry, quality products

- Kiln-dried flooring: red oak, white oak, and hickory
- Eastern white pine paneling and flooring 12-20 in. wide
- Post and beam timbers up to 26 ft. long

Proud manufacturers of NHLA quality lumber

101 Hampton Rd. • Pomfret Center, CT 06259
tel 800-353-3331 • fax 860-974-2963 • www.hullforest.com
Contact Craig H. Capwell, capwell@hullforest.com

Kiln-Dried Timber!

SunDried Resolved the "Green" Dilemma

SunDried Wood Technologies has refined a unique radio frequency/vacuum technology that uniformly kiln-dries whole timbers, bringing the percentage of the wood's moisture content down to single digits. SunDried timber is as dry at its heart as it is on the surface.

With SunDried Timbers you get:
- Dimensional Stability
- Optimal Structural Integrity
- No Additional Checking
- Peace of Mind

(304) 965-7700
sundriedwood.com
P.O. Box 130, Elkview, WV 25071

SunDried can dry most hardwoods and softwoods, including Northern Red Oak, Douglas Fir and Eastern White Pine

SunDried WOOD TECHNOLOGIES

Reliance
SPECIALTY
BUILDING PRODUCTS

TIMBERS SELECT FOR APPEARANCE
FOHC NO WANE GRN, STANDING DEAD OR KD S4S OR RGH

QUALITY WOOD PRODUCTS
FROM THE PACIFIC NORTHWEST

WWW.RELIANCESBP.COM
800 697 4705

"APPRECIATE" YOUR INVESTMENT

ENCLOSE your timber frame with America's premier structural insulating panels. Our polyurethane panels' in-molded wire chases, cam-locking system and T&G joints allow for the quickest of installations. Available in R-values of R-28, R-35 or R-43. Murus EPS panels are offered in R-16, R-23, R30, R-38 or R-45.
Polyurethane or EPS, consider Murus for all your SIP needs!

murus
STRUCTURAL INSULATING PANELS

PO Box 220
Mansfield, PA 16933
570-549-2100
Fax 570-549-2101
www.murus.com
murus@epix.net

Foard
PANEL

The Timber Framer's Panel Company

www.FoardPanel.com
P.O. Box 185, West Chesterfield, NH 03466
603-256-8800, info@foardpanel.com

Hundegger USA

Ask us about the updated
K2 Joinery Machine
and the new
PBA Panel Machine

Call or e-mail us for a free video
(435) 654-3028 or (801) 361-4030
INFO@HUNDEGGERUSA.COM--WWW.HUNDEGGERUSA.COM

COWLS

Your Post & Beam Source

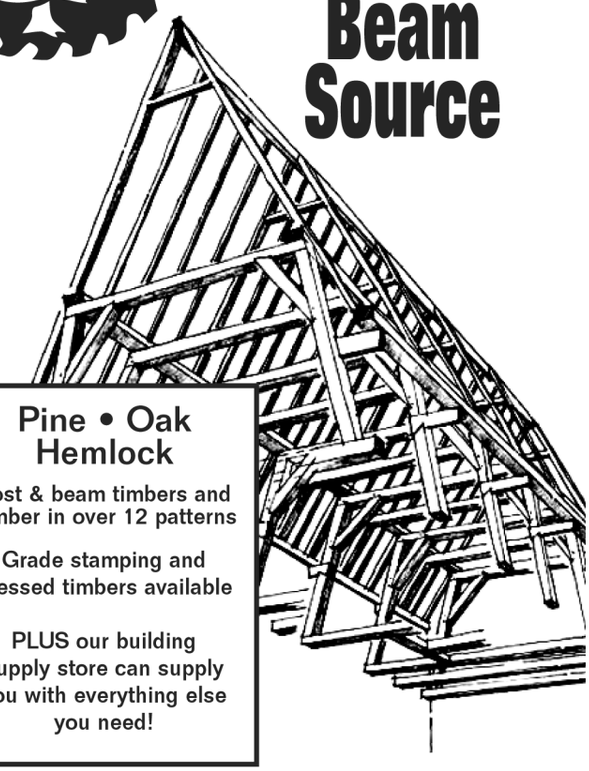

Pine • Oak
Hemlock

Post & beam timbers and lumber in over 12 patterns

Grade stamping and dressed timbers available

PLUS our building supply store can supply you with everything else you need!

W. D. COWLS, INC.
134 Montague Road, P.O. Box 9677
North Amherst, MA 01059
413-549-1403 • Fax 413-549-0000

info@cowls.com • www.cowls.com

QUALITY TOOLS FOR TIMBERFRAMERS

Makita® Chain Mortiser

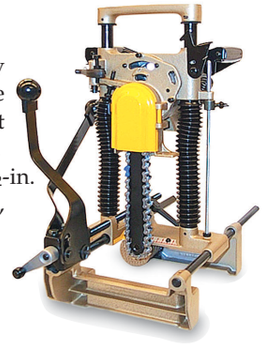

Save countless hours cutting mortises by using Makita's chain mortiser. This machine cuts extremely fast, accurately, and can pivot to three cutting positions without resetting. Chain mortiser comes complete with $^{23}/_{32}$-in. chain, sharpening holder assembly, wrench, and chain oil. An unbelievable machine!

Makita® 16 $^{5}/_{16}$-in. Circular Saw

Standard Equipment 32-tooth Carbide Blade! 16$^{5}/_{16}$-in. blade cuts 6$^{3}/_{16}$ at 90° and 4$^{3}/_{4}$ at 45°. HD 2,200-rpm motor with electric brake gives you plenty of power to cut the big stuff. Has precision gearing with ball and needle bearings for smooth and efficient power transmission. Includes combination blade, rip fence, and two wrenches. Top quality product!

The Commander

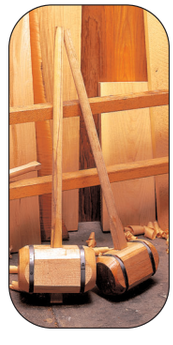

For over two centuries the maker's family has provided timber framer's and carpenter's mallets for persuading immovable objects. We've all heard "...get a bigger hammer" and this is what it means. Head is made from extremely dense hardwood and the handle is made out of Japanese White Oak, noted for its strength and longevity. Head is metal banded to reduce splitting. Head measures 5 x 5 x 9$^{3}/_{4}$ and weighs approx. 120 oz. Handle measures 36 in. Seen at log and timberframe construction sites all over.

Free Catalog

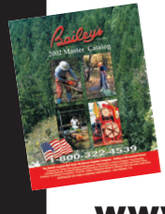

Call for a FREE 116 page full color 2002 Master Catalog mention source code QX4Z

Baileys® Est. 1975

The World's Largest Mail Order Woodsman Supplies Company- Selling at Discounted Prices

www.baileys-online.com

1-800-322-4539

www.timberwolftools.com

1-800-869-4169

TIMBERWOLF TOOLS

BIG TIMBER POWER TOOLS

Speed * Power * Precision

PROTOOL PLP 350 E
13-3/4 In. Beam Planer

8-1/16, 9-5/8 & 13-3/4 In. Planers
13-3/16, 14-15/16 & 16-1/2 In. Circular Saws
11-1/2 In. Portable Band Saws

German Engineered Tools

Drill Guides, Beam Saws, Slot Cutters and More...

Exclusive Distributor

PROTOOL®

Power Tools For Professionals

Masters of our craft

mafell

The widest range of specialized machines for timber framing

Quality made in Germany

• Very handy chain mortising machine – stationary support available as optional accessory.

LS 103
Chain mortiser

Please call us!
We can provide leaflets with detailed information and all technical data.

MAFELL North America Inc.
1975 Wehrle Drive, Suite 120 · Williamsville, N.Y. 14221
Phone: (716) 626-9303 · FAX (716) 626-9304
e-mail: mafell@msn.com · Internet: www.mafell.com

GRUPPE DREI

performs in every season

- Urethane or EPS cores
- 4 x 8 to 8 x 24
- Full CAD/CAM pre-cut services
- Panels for timber frames and hybrids
- Delivery anywhere in North America
- A crane truck for ease of unloading if your site is within 300 miles of our plant

winterpanel

74 Glen Orne Drive, Brattleboro, VT 05301
802-254-3435 Fax: 802-254-4999
winterpanel.com

EnerGreen
Building Systems Ltd

Manufacturers of Structural Insulated Panels

It's a Wrap!

Tested & Engineered
3-D CAD, customized drawings
Full Service - Design to Installation
Engineered structural components also available
Prompt service to Western States, Alaska and Canada
Precision pre-cutting + lumber installation = job site ready

SIPA Structural Insulated Panel Association

3294 262 Street, Aldergrove, BC, Canada V4W 2X2
604-856-0600 Fax: 604-856-0608

www.energreenbsl.com

ESL
EVERGREEN SPECIALTIES LTD.

OUR QUALITY
. . . limited only by your imagination!

FOR SALE

DRY LARCH the conifer that thinks it's a hardwood
NATURE'S RECYCLED TIMBER
SELECTIVELY LOGGED STANDING DRY TREES
DIRECT FROM THE FOREST TO YOU
DRY BANDSAWN JOISTS, POSTS & BEAMS

Harder and Stronger than Douglas Fir
Dense grain: up to 20 rings/in.
Used for timber construction
PHOTOS via e-mail on request

Contact Bruce Lindsay
Toll free 877-988-8574
FAX 604-988-8576
Timber Supplier since 1989

When compromise is not an option, call us.

Timeless Beauty

Timbers, Flooring & Millwork from Reclaimed Materials

Contact Liz Bieter:
218-727-2145
or email:
liz@duluthtimber.com

Locations:
Duluth, Minnesota
Ukiah, California
Edison, Washington

DULUTH TIMBER COMPANY
LOGGING THE INDUSTRIAL FOREST

World's finest timber, expertly sawn for appearance.

Douglas Fir Red Cedar
Sitka Spruce Yellow Cedar

Any size. Any grade. Any specification.
Kiln Drying. S4S. Delivered prices.

Pacific Timber Supply Ltd.

2999 Beach Drive, Victoria, BC
Canada V8R 6L1
Tel: (250) 380-9688
Fax: (250) 380-6388
Email: info@PacificTimber.com

FRASERWOOD INDUSTRIES
KILN DRIED TIMBERS

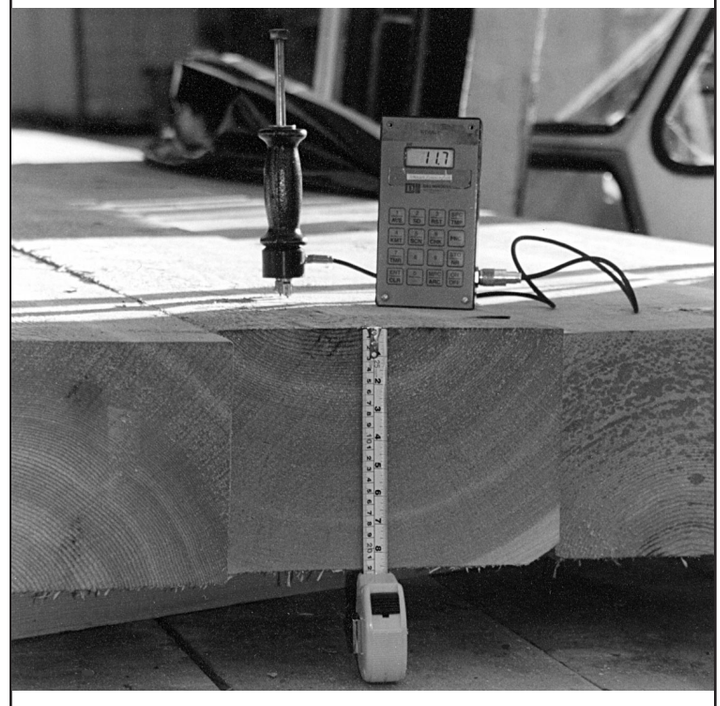

"Your timbers offer the reality of which we have dreamed for many years."

Ben Brungraber, PhD, PE, Operations Director, Benson Woodworking Co.

Fraserwood Industries' radio frequency/vacuum kiln with its unique restraining system can dry timber of all dimensions and up to 40 ft. long to 12% MC with minimal degrade.

FRASERWOOD INDUSTRIES
Please call Peter Dickson at (604) 892-7562.
For more information, visit our web page at www.fraserwoodindustries.com.

A Precise Production Tool at a Competitive Cost

A 100 Year Tradition Continues. Quality-Made in Germany

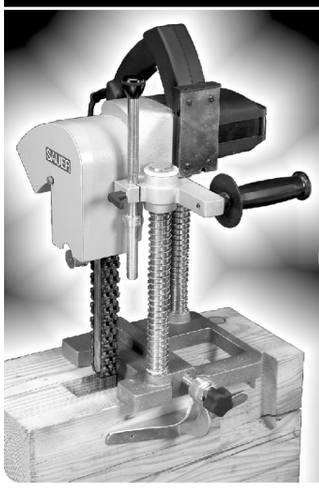

- Chain Mortisers
- Carpenter's Chainsaws
- Slotting Mortisers

SAUER - 6" Chain Mortiser
1 1/2" or 2" Chain & Bar
Support Frame Included

Call now! **(416) 675-2366**

TimberTools.com

Foam Laminates of Vermont

Supplying quality stresskin panels for Timber Frame structures since 1982

- Superior Quality
- Built to your Specifications
- Curtainwall and Structural
- Professional Installation Available
- Friendly, Knowledgeable Service
- Specializing in Timber Frame Enclosures

PO Box 102 Hinesburg, VT 05461
802-453-4438 Phone 802-453-2339 Fax
E-mail foamlam@sover.net
www.foamlaminates.com

LANDARK WOOD FINISH

All natural, citrus base, penetrating finish
timbers • logs • v-groove • cabinets • doors • floors

Advantages:	Available in:
No chemical additives, driers, or petroleum products	**Liquid finish** (wicks deeply into checks)
User friendly, biodegradable, non-ozone depleting	**Soft wax** (nonstaining end-grain sealer)
Reduces further checking, even in green oak	**Aniline dye wiping stain** (one step, soft wax base)
Renewable resources used for all ingredients	**Exterior finish** (weathers to silver-gray)

Mike and Nita Baugh
213 Townes Rd, Augusta, SC 29860
803-279-4116
fax 803-278-6996

INSULSPAN™

No. 1 Brand Leader in Structural Insulated Panels

Your complete building system solution, preferred by timber framers everywhere.

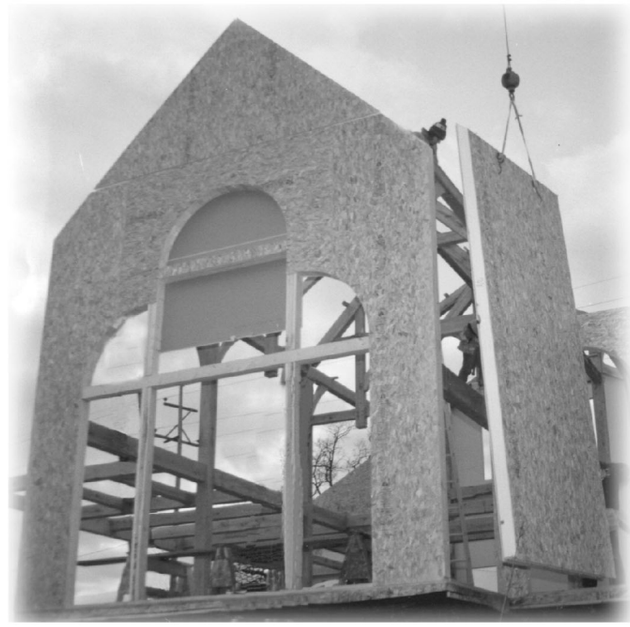

Sold and serviced nationwide, Insulspan leads the industry in the development, manufacturing and performance of structural insulated panels.

1.800.PANEL.10

INSULSPAN™
STRUCTURAL INSULATED PANEL SYSTEM
www.insulspan.com

QUALITY OAK TIMBERS

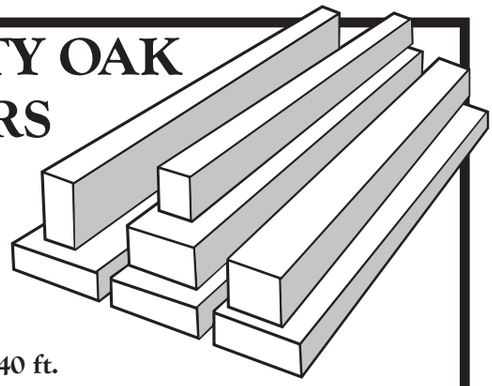

- **Accurate, custom 4-sided planing up to 9 x 15 x 40 ft.**
- **Also 2x6 and 1x6 T&G White Pine in stock**

Call for timber price list, 419-281-3553

Hochstetler Milling, Ltd.
552 St. Rt. 95
Loudonville, OH 44842

PUBLISHED BY
THE TIMBER FRAMERS GUILD
PO BOX 60, BECKET, MA 01223

NON-PROFIT ORG.
U.S. POSTAGE
PAID
EAST BARRE, VT
PERMIT NO. 2

Ken Rower

Union Meetinghouse, Huntington, Vermont, 1870, kingpost trusses with princeposts. A very tight strut-princepost-upper chord joint, skillfully cut and aided by the pressure of time. Note shrinkage ghosts of strut on post and post on chord. *See page 16.*